5 Steps to Better Box Joints

Tips for Buying Top-Quality Lumber

Drill Perfect Holes Without a Drill Press

Woodsmith®

Woodsmith.com

Vol. 33 / No. 195

Small Shop ROUTING SOLUTIONS

ALSO!

- Learn to Create an Easy-to-Use, Versatile Finish
- Details that Make a Difference
- 7 Problem-Solving Hinges

A Publication of August Home Publishing

Table of Contents

from our readers
Tips & Techniques 4

all about
7 High-Tech Hinges 8
These hinges solve challenging hardware problems on almost any project.

tools of the trade
Benchtop Router Tables 10
A compact package doesn't mean sacrificing full-size routing capabilities.

Woodsmith GO ONLINE EXTRAS

jigs and fixtures
Wolfcraft Drill Guide. 12
Inexpensive and easy-to-use, this drill guide makes drilling straight, square holes a snap.

woodworking technique
Perfect-Fitting Box Joints 14
Create tight-fitting box joints with a simple table saw jig and step-by-step instructions.

tips from our shop
Shop Notebook 32

woodworking essentials
Tips for Buying Lumber 44
Learn the ins and outs of getting the most for your money when buying lumber online.

finishing room
Working with Milk Paint 42
This unique finish might be the solution to creating a one-of-a-kind project.

details of craftsmanship
The Versatile Chamfer 48
Simple to create but complex in its uses, here's what you need to know about chamfers.

in the mailbox
Q & A 50

hardware and supplies
Sources 51

Wine Rack page 18

Four Poster Bed page 24

projects

weekend project — DESIGNER'S NOTEBOOK

Countertop Wine Rack. 18

Looking for a small project with a ton of style? This countertop wine rack features classic woodworking and custom details. Woodsmith GO ONLINE EXTRAS

designer series project

Classic Four Poster Bed 24

Inexpensive materials and simple construction make this bed an easy build. The details and finish give it a timeless look.

heirloom project

Step-Back Cupboard 34

This cupboard features some great design elements that tie everything together: fine proportions, a beadboard back, a raised panel door, and traditional hardware.

Step-Back Cupboard page 34

editor's note
Sawdust

There are times when I wish things wouldn't change so fast. Instead of struggling with a sheet of plywood, I'd still be able to easily carry it from the truck to my shop. And then to cut it to size, I'd be able to accurately set the rip fence — without having to search for my reading glasses just so I could zero-in on a setting.

A couple of the projects in this issue take me back to a slower-paced, less changing time. The four poster bed (page 24) is a classic design that will always look great, no matter what's changing around you. And on page 34, you'll find a step-back cupboard that, at least for me, brings back memories of simpler days.

But things never seem to stay in one place. Change is inevitable, and so it is around here, too. Terry Strohman, the Editorial Media Director for *Woodsmith* and *ShopNotes* magazines has moved on to assume that role for *Cuisine at home* (another publication here at August Home). He's going to do a great job there, but I wanted to thank him for the past 20+ years of hard work and guidance in making *Woodsmith* and *ShopNotes* two of the best woodworking publications available today.

As part of the change, Vince Ancona will take over the day-to-day tasks associated with managing *ShopNotes* (my old job), in addition to *Woodsmith*. Vince spent a number of years on *ShopNotes*, so he's well-suited for the job. Finally, I've picked up the responsibilities of editor for both magazines. It's a change that I'm finding has a host of great opportunities, and new challenges, as well.

We'll still continue to provide you with original tips and techniques, great projects, and detailed instructions to help make you a better woodworker and get more out of the time you spend in your shop. But I'd also like to hear what you think we should be doing or any changes you feel we need to be making. Drop me a note at bgnelson@augusthome.com and let me know.

Bryan

Woodsmith GO ONLINE EXTRAS

This symbol lets you know there's more information online at www.Woodsmith.com. There you'll see step-by-step videos, technique and project animation, bonus cutting diagrams, and a lot more.

from our readers

Tips & Techniques

Sharpening a Skewed Blade

I have a couple of tools with skewed blades. I find it a difficult task to sharpen these tools with a standard honing jig. So I built the jig you see in the photo above. This jig holds the blade at the proper angle to the sharpening surface so I can hone a perfect edge identically every time I use it.

As you can see in the drawing at left, the jig consists of a block with a fence and a stop to position the tool. Acrylic attached to the bottom of the block allows it to glide over a base that holds a strip of sandpaper for sharpening. Since the jig is built to fit a specific chisel, plane iron, or turning tool, you may need to adjust the size or angle to your needs.

I chose MDF to make the base. It's smooth and flat, so it makes the perfect base for sharpening. The mitered block is made from hardwood. The bevel on top of the block is cut to match the bevel on the blade, as shown in Figure 1 below. The next step is to cut a wide dado so that the block straddles the base (Figure 2). Figure 3 shows you how to cut an angled kerf in the top of the block to match the skew of the blade. Finally, you can cut two pieces of hardboard for a fence and a stop then glue them in place.

To finish off the block, I added two glides on each end of the block. The glides are made from acrylic and are glued in place.

When the jig is complete, you can clamp it to a worksurface to start sharpening. I cut several extra bases so I can use different grit sandpaper for a progressively finer hone on the blade.

Ted Raife
Des Moines, Iowa

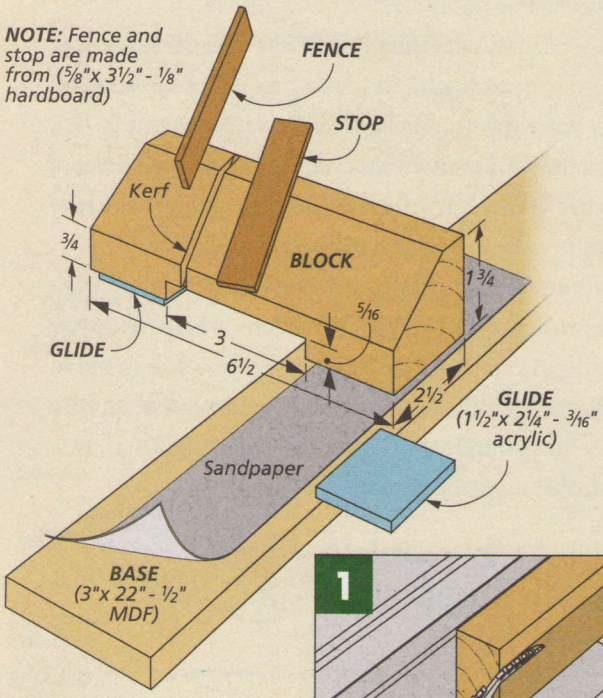

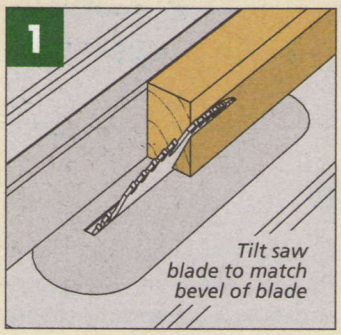

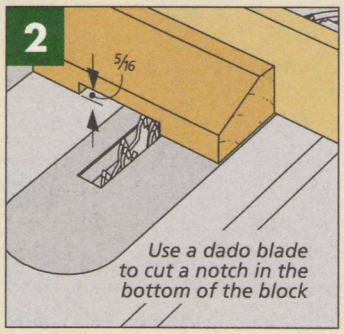

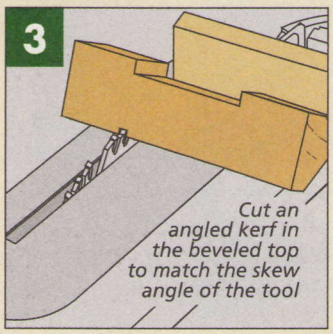

Quick Insert Leveling

Leveling a shop-made insert plate on your table saw can be a time-consuming process. But I found a quick and easy way to tackle this chore using a hot-melt glue gun and some paste wax.

I start by applying a coat of paste wax on the tabs that support the plate. After the glue is heated in the gun, squeeze a dab of glue onto each tab where they meet the insert, as shown in Step 1. Then press the plate into the opening until it's flush with the table. I use a straightedge, like the level shown in Step 2. The paste wax prevents the glue from sticking to the tabs. But it sticks to the insert plate to keep it level. In just a few seconds I have a flush insert plate that I can use over and over.

Jordan Shatsoff
Waltham, Massachusetts

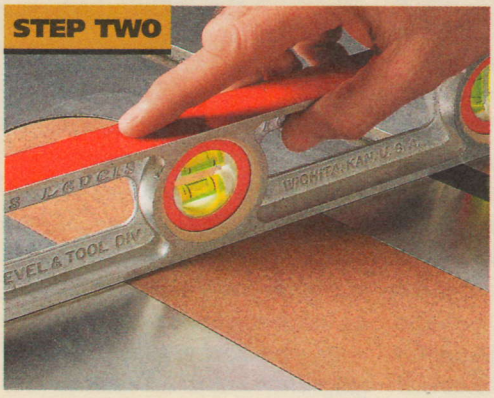

Handy Tool Storage

Single hooks on a pegboard take up too much space for my extensive collection of screwdrivers and other small hand tools.

A compact solution for storing a lot of tools is a section of ammunition belt, like the one you see in the photo. These belts can be purchased in most sporting goods stores.

Larry King
Clanton, Alabama

SUBMIT YOUR TIPS ONLINE

If you have an original shop tip, we would like to hear from you and consider publishing your tip in one or more of our publications. Go to:

Woodsmith.com
Click on the link,
"SUBMIT A TIP"

You'll be able to tell us all about your tip and upload your photos and drawings. You can also mail your tips to *"Woodsmith Tips"* at the editorial address shown at right. We will pay up to $200 if we publish your tip.

FREE TIPS BY EMAIL

Now you can have the best, time-saving secrets, solutions, and techniques sent directly to your email inbox. Just go to **Woodsmith.com** and click on ***Woodsmith Tips***
You'll receive one of our favorite tips each week.

Woodsmith®

No. 195 June/July 2011

PUBLISHER Donald B. Peschke

EDITOR Bryan Nelson
MANAGING EDITOR Vincent Ancona
SENIOR EDITOR Ted Raife
ASSOCIATE EDITOR Dennis Perkins
ASSISTANT EDITOR Carol Beronich
CONTRIBUTING EDITORS Phil Huber, Randall A. Maxey, James Bruton

EXECUTIVE ART DIRECTOR Todd Lambirth
SENIOR ILLUSTRATORS David Kreyling, Harlan V. Clark, David Kallemyn
SENIOR GRAPHIC DESIGNER Bob Zimmerman
GRAPHIC DESIGNER Shelley Cronin
CONTRIBUTING ILLUSTRATORS Dirk Ver Steeg, Peter J. Larson, Erich Lage

CREATIVE DIRECTOR Ted Kralicek
SENIOR PROJECT DESIGNERS Ken Munkel, Kent Welsh, Chris Fitch, Jim Downing
PROJECT DESIGNER/BUILDER John Doyle
SHOP CRAFTSMEN Steve Curtis, Steve Johnson
SENIOR PHOTOGRAPHERS Crayola England, Dennis Kennedy
ASSOCIATE STYLE DIRECTOR Rebecca Cunningham
SENIOR ELECTRONIC IMAGE SPECIALIST Allan Ruhnke
PRODUCTION ASSISTANT Minniette Johnson
VIDEO EDITOR/DIRECTOR Mark Hayes, Nate Gruca

Woodsmith® (ISSN 0164-4114) is published bimonthly by August Home Publishing Company, 2200 Grand Ave, Des Moines, IA 50312.

Woodsmith® is a registered trademark of August Home Publishing.
Copyright© 2011 August Home Publishing Company. All rights reserved.

Subscriptions: Single copy: $4.95.
Canadian Subscriptions: Canada Post Agreement No. 40038201. Send change of address information to PO Box 881, Station Main, Markham, ON L3P 8M6.
Canada BN 84597 5473 RT
Periodicals Postage Paid at Des Moines, IA, and at additional offices.
Postmaster: Send change of address to *Woodsmith*, Box 37106, Boone, IA 50037-0106.

WoodsmithCustomerService.com

ONLINE SUBSCRIBER SERVICES
- **VIEW** your account information
- **RENEW** your subscription
- **CHECK** on a subscription payment
- **PAY** your bill
- **CHANGE** your mailing or e-mail address
- **VIEW/RENEW** your gift subscriptions
- **TELL US** if you've missed an issue

CUSTOMER SERVICE Phone: 800-333-5075

SUBSCRIPTIONS
Customer Service
P.O. Box 842
Des Moines, IA 50304-9961
subscriptions@augusthome.com

EDITORIAL
Woodsmith Magazine
2200 Grand Avenue
Des Moines, IA 50312
woodsmith@woodsmith.com

AUGUST HOME PUBLISHING COMPANY

Printed in U.S.A.

Dowel Maker

Odd-sized dowels and dowels of specialty wood species are often hard to come by. You can buy a dowel maker to make your own but the high price is often hard to justify for a small shop. I came up with the dowel maker you see in the right photo. It is nothing more than a section of angle iron with a series of holes drilled in the center. The rim of each hole makes a sharp cutting edge that removes material from the sides of an octagonal blank to make a round dowel (left photo).

I drilled the holes in the center of the angle iron with the corner resting in a v-block. A twist bit creates a sharp cutting edge. Then I flipped the angle iron over and clamped it to a drill press table.

To make the dowel, I first beveled the corners of a square peg. Then I chucked the blank in the drill press. With the drill off, I pushed it through the round hole in the angle iron. I find the drill press gives me the leverage I need to drive the blank through.

Bruce Sibbett
San Bernardino, California

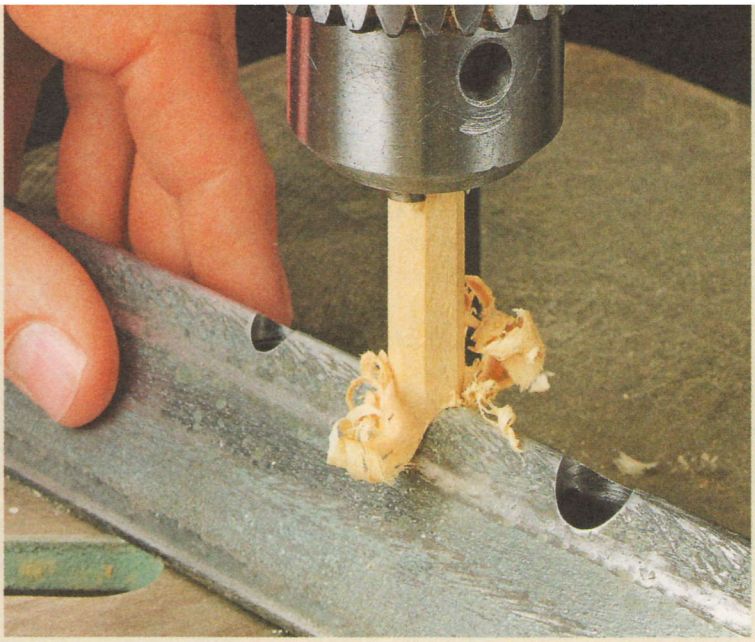

CD Storage Bin

For years, I've stored surplus hardware in glass jars. These jars work great — until you drop one. That's why I switched to the plastic storage bins that writable compact disks come in.

The large plastic containers are light and can be easily screwed to the underside of cabinets. Plus they come apart much quicker than ordinary glass jars. Another advantage is the opening. A jar usually has a narrow mouth. But the large opening in the CD containers gives easy access to the contents without dumping it out.

Mike Sonnenberg
Lexington, Kentucky

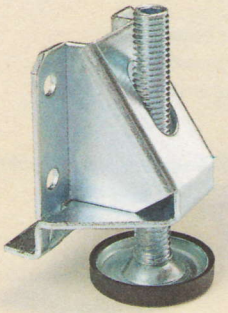

Level a Miter Saw

Leveling a miter saw to an adjoining workbench can be a frustrating job. I found an easy way using leg levelers under a saw platform.

As you can see in the drawing, I built a simple frame that sits on a saw stand. Then I mounted levelers upside down on the frame and drilled holes in the stand so I could adjust their height. Finally, I bolted the miter saw to the platform and placed it on the frame. Counterbores drilled in the underside of the platform line up with each leveler and secure the platform in place. Now it's an easy task to level the miter saw.

Robert Dixon
East Falmouth, Massachusetts

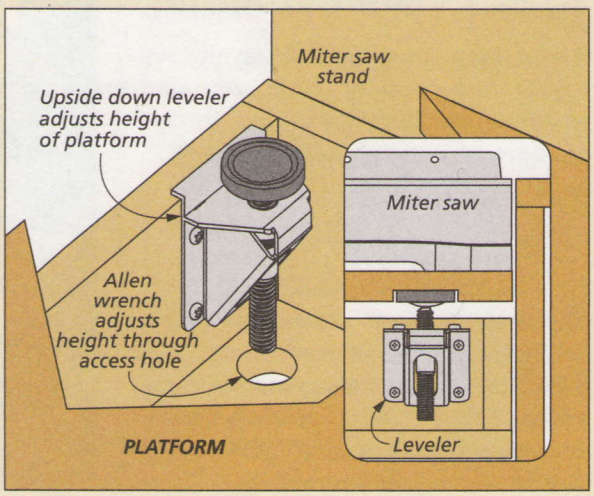

Wedges

Cutting a compound miter on splayed legs is an easy task if you have a compound miter saw. But it can be a hassle on a table saw to tilt the saw blade and angle the miter gauge correctly. Plus, drilling out the mortises becomes even more time-consuming.

To make the task easier, I use a pair of hardwood wedges. The wedges are used with a sled to make a compound miter cut at the ends. Then you can use them at the drill press for the mortises. With these wedges, compound miters are much easier to work with.

Gregory Habas
Georgetown, Texas

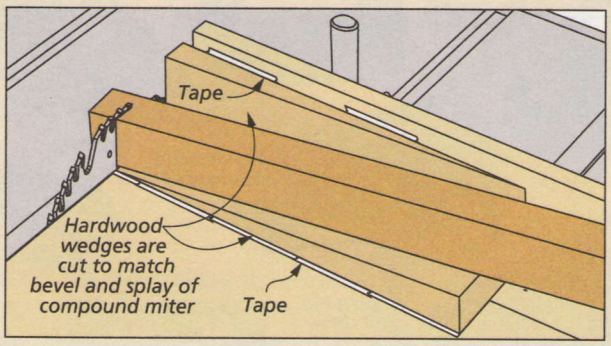

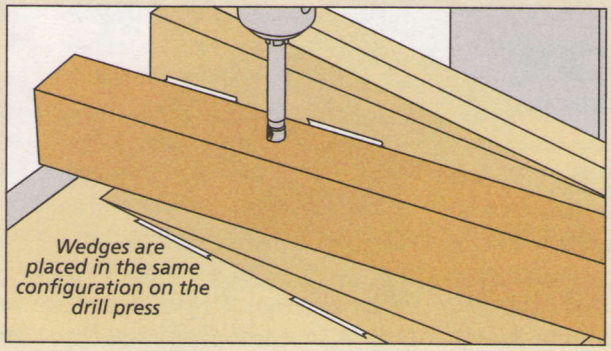

Delicate Parts Clamp

Finding a clamp for small or delicate parts is always a challenge. The typical clamp is either too cumbersome or has too much force for fragile workpieces.

I found the answer in a clothespin. As you can see in the photo, I took spring clothespins and sanded the ends back for greater control. The ends can be sanded to any shape you need, including a point for clamping models.

The small spring that holds the clothespin together provides just enough clamping power for the job.

Alexander Bove
Chestnut Hill, Massachusetts

Win This Bosch Impact Driver

That's right, send us your favorite shop tips. If your tip or technique is selected as the featured reader's tip, you'll win a *Bosch* impact driver just like the one shown here. To submit your tip or technique, just go online to *woodsmith.com* and click on the link, "SUBMIT A TIP." You can submit your tip and upload your photos for consideration.

The Winner!

Congratulations to Robert Dixon, winner of the *Bosch* impact driver. To find out how you could win this driver, check out the information on the left.

Quick Tips

HANDY MIRROR

I use a ceiling-mounted air cleaner in my shop with a remote to turn it off and on. The only problem is I need to be in the direct line of sight with the switch in order for the remote to work. Sometimes that's just not possible. But a strategically placed mirror is a big help.

I mounted a small mirror to the shop ceiling so I could see the switch in it. Now I just aim the remote at the mirror and the signal bounces off it and turns the air cleaner on.

John Kaner
Anchorage, Alaska

FOAM SANDER

You can buy contoured sanding blocks for sanding odd shapes. But these are expensive. I found foam water "noodles" to be an inexpensive alternative.

Water noodles are a child's pool toy that can be purchased at most discount stores for a few dollars. They're made from foam and you can easily cut them into any shape you desire for sanding profiles and curves.

Charles Mak
Calgary, Alberta

PREVENT BLISTERS

When I use a screwdriver for an extended period, I always end up with blisters on my hands and my grip seems to wane over time.

I found the answer in an oven mitt with a silicone cover. The mitt protects my hand and the silicone helps strengthen my hold on the slippery tool handle.

Ellis Biderson
Huntington Beach, California

7 high-tech Hinges

Take a look at a few engineered hinges that solve some vexing installation challenges.

For many years, a hinge was just a hinge. There were different styles, sizes, and shapes, but they all worked pretty much the same way — two leaves pivoted around a pin. However, when it comes to some of the high-tech hinges available today, that simple description doesn't really apply. Here's a selection of hinges that offer something extra. You'll find source information on page 51.

1 Fall Door Hinge

This clever hinge takes the hassle out of accurately installing a 90° fall door on a desk or cabinet. To mount the two-piece hinge, all you have to do is bore a pair of 35mm holes. Then once installed, the hinge allows easy lateral, height, and gap adjustment to achieve a perfect fit between the door and the cabinet.

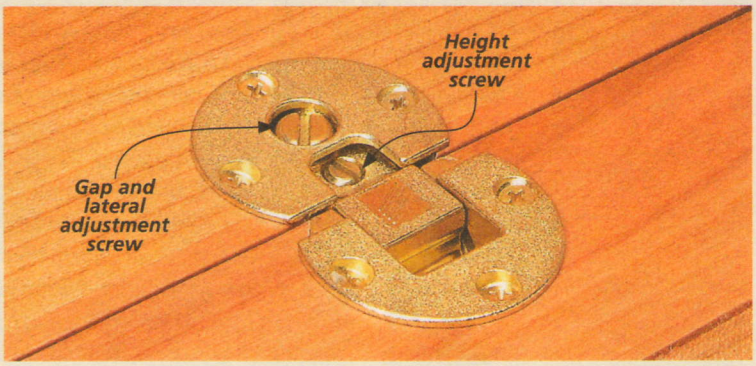

2 Compact Face Frame

If you don't like the bulky, two-piece design of most Euro-style hinges, try this one-piece compact style. This hinge offers easy installation, three-way adjustability, snap closing, and comes in several overlay widths.

3 Lid-Stay Torsion Hinge

Installing a set of these heavy-duty lid hinges on a toy or blanket chest will kill two birds with one stone. They'll fill the role of both hinge and lid stay.

The trick here is that built-in torsion resistance allows the hinges to support a heavy chest lid safely in any open position. At the same time, the lid will open and close smoothly with minimal effort. This same type of function is seen on laptop computers.

To accommodate lids of different sizes and weights, the hinges are available in a range of torque capacities. The supplier offers a formula for figuring your needs.

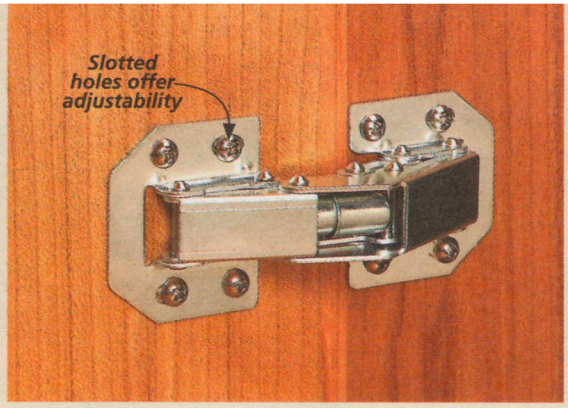

4 No-Mortise Concealed Hinge

One drawback to using concealed Euro-style hinges is the need to drill large, accurately positioned cup holes on the inside face of the door. The concealed hinge shown above offers similar features along with the advantage of quick and easy, surface-mount installation. This versatile hinge can accommodate both inset and overlay installations, opens a full 90°, and has a spring action hold-open and snap-closing feature. An added bonus is that it's less expensive than most concealed hinges.

5 Hold-Up Hinge

From the look of the hinge shown at right, you would think it has to perform a pretty specialized task. And you would be right. This hinge is designed to make getting at the contents of an overhead bin a bit more convenient. When you lift the drop-down door to horizontal, a built-in lock automatically engages to hold it open at 75°. To close the door, all you do is lift it slightly to disengage the locking mechanism.

6 Lipped Door Hinge

Doors that are rabbeted to lap over a face frame have been a mainstay of all types of cabinetry for years. It's a pretty foolproof way to fit a door. But until recently, there was no Euro-style hinge to handle this common application. Fortunately, that void has been filled by this new lipped door hinge.

7 Blumotion Soft Close

When you first observe a *Blumotion* hinge closing a door, you'd swear there was magic involved. All you have to do is start the door on its way. When almost closed (at about 25°), the hinge takes over and slowly, gently, and quietly completes the job. They're available for numerous installation types.

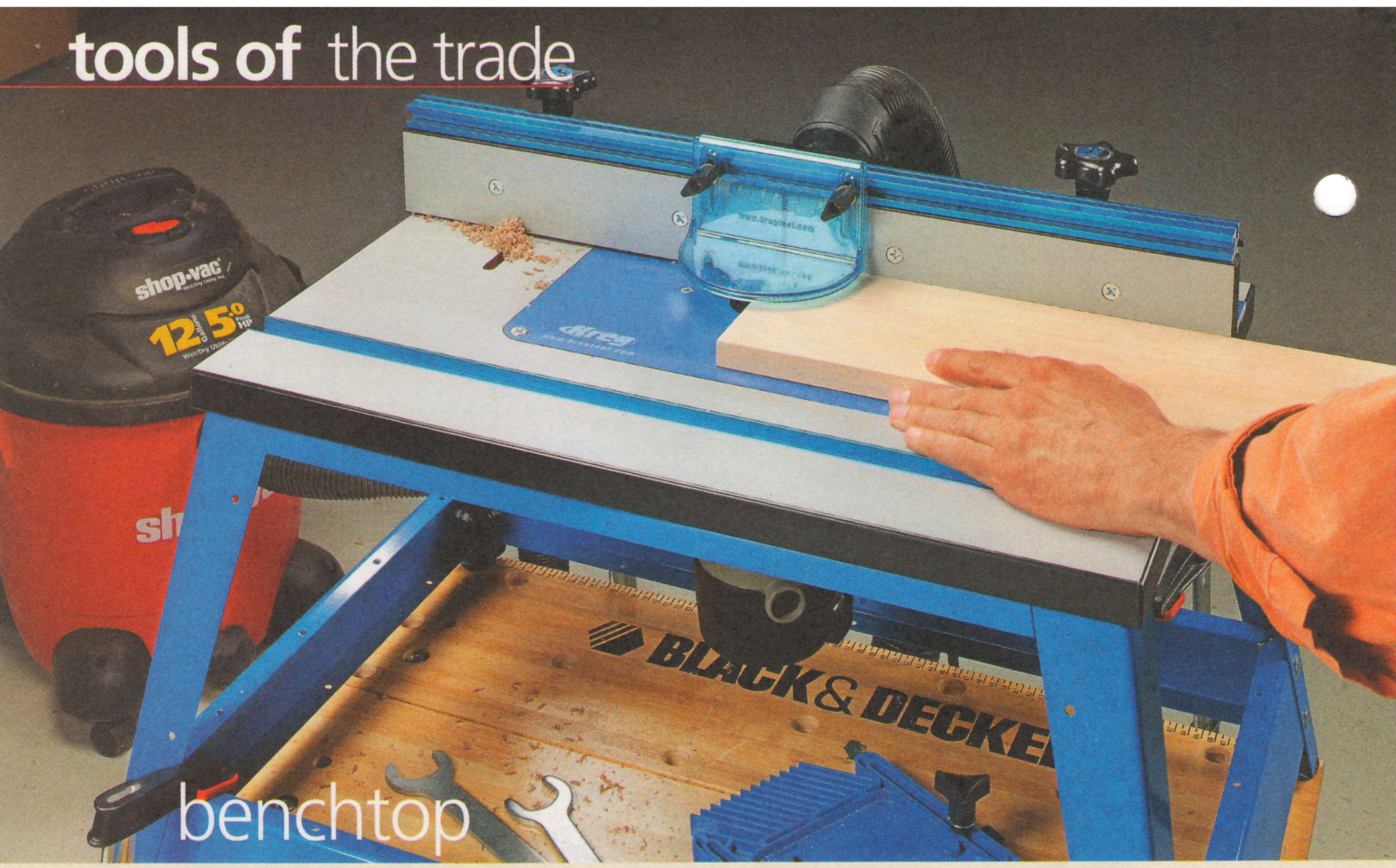

benchtop

Router Tables

You don't need to sacrifice features or accuracy to save space. Benchtop router tables offer plenty of both in compact packages.

A router table is one of those "must-have" tools for any serious woodworking shop. But in a small shop, a large table can take up too much space to be a viable option. Fortunately, there are several portable benchtop alternatives.

▼ The open base *Kreg* benchtop router table stores easily.

They make it possible to have a fully functional router table without sacrificing key features.

JOBSITE PORTABILITY. For years manufacturers designed benchtop tables with two different types of woodworkers in mind. Many early models seemed to cater to the needs of the finish carpenter and cabinet installer. These users need portability and durability. And they need a table rugged enough to be tossed in the back of a pickup and set up quickly.

SMALL SHOP SENSIBILITY. The other group is the growing number of home-shop woodworkers. This group looks for the accuracy of full-sized tables. These tables include features like split fences, dust collection, easier height adjustment and a few other features many carpenters consider "bells and whistles."

Now, most manufacturers incorporate the best ideas from both types of users into the benchtop tables you'll find today. And frankly, it's a win for everyone.

Today's router tables can easily be stored under a workbench or counter in the shop, as in the photo at left. The modern designs also offer accurate but easy-to-use fences and other features. Either way, these tables make a lot of sense, especially if you don't use your router table every day.

TWO TYPES

Current benchtop router tables can be divided into two types — open

base or cabinet style. I picked one of each kind to try out. The open-based *Kreg Benchtop Precision* table (main photo) and the *Benchdog ProTop Contractor* cabinet-style table (right photo) are great representatives of the two types.

SIMILARITIES. In spite of their differences, both tables satisfy the major requirements of a portable router table. They easily clamp to a benchtop or worktable and they accommodate most common routers. Plus, they're easy to store, as shown in the lower left photo on the opposite page.

These tables share a number of common design ideas and features. For example, both offer large (16" x 24") tables made from laminate-covered MDF. Both also feature adjustable fences with dust ports and T-track to hold accessories (photos below).

They also rely on phenolic mounting plates rather than directly attaching the router to the tabletop. Finally, both manufacturers provide rubber feet to minimize vibration. In short, you can't go wrong with either table. (Refer to Sources on page 51.)

A SECOND TABLE? Even if you have a full-sized router table, there are times when a second one can be a useful addition. Especially when you have to deal with tricky setups like cope and stick bits, template routing using both flush trim and pattern bits, and creating multi-bit molding profiles. In these situations, having two tables for the different setups is a big time saver.

Of course, if you prefer a quick and easy shop-made solution for your routing needs, the box below points you toward the plans for a simple alternative. W

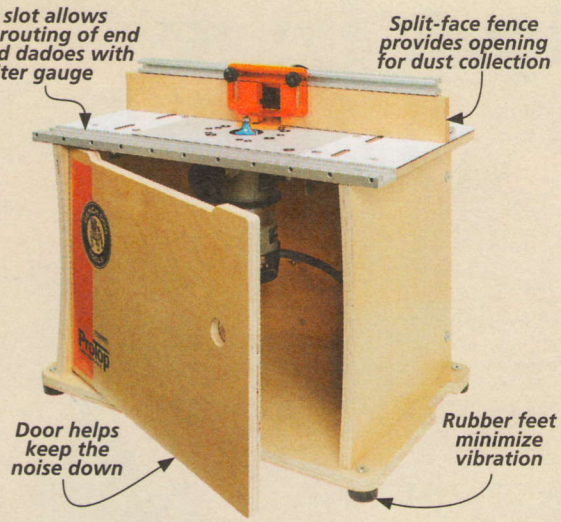

▲ A small, cabinet-style table can handle just about any routing task.

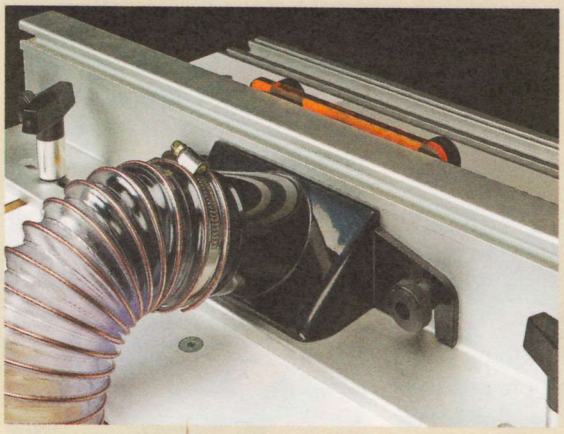

▲ A fence-mounted dust port is the norm on most tables with quick hook-up to your shop vacuum or dust collector.

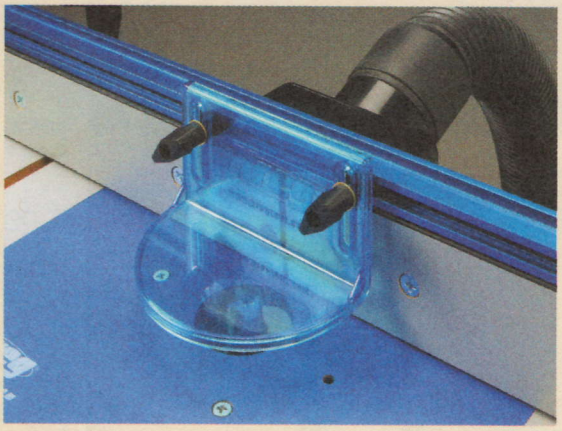

▲ T-track incorporated into the fence allows you to install bit guards or other accessories, like featherboards or auxiliary fences.

Build Your Own: Benchtop Router Table

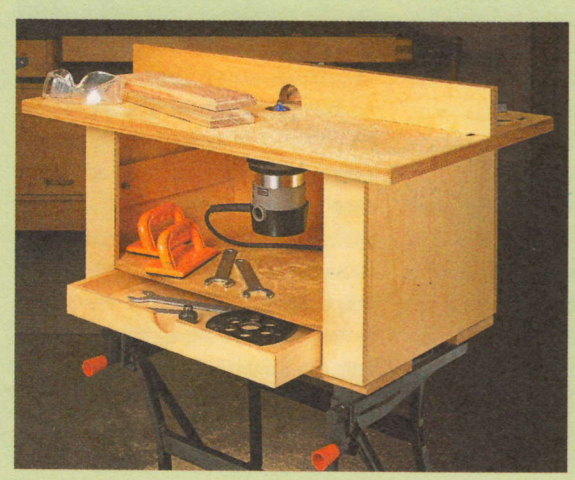

Convinced you need a benchtop router table but don't want to spend a lot? Here's a shop-made alternative that will serve you well for years without breaking the bank. The table features a simple fence that's easy to adjust and locks down tight for precise, accurate cuts every time. On top of that, there's a handy storage drawer for your bits and accessories.

Best of all, it's easy to build. And by using ½" plywood, you can also keep the weight down, which can be a big plus when it's time to stow it away. You can set it up on your workbench or mount it on a portable worktable, as shown in the photo. You'll find the detailed plan and step-by-step instructions for building the table online at Woodsmith.com.

Woodsmith GO ONLINE EXTRAS

To download plans for this benchtop router table, visit our website at Woodsmith.com.

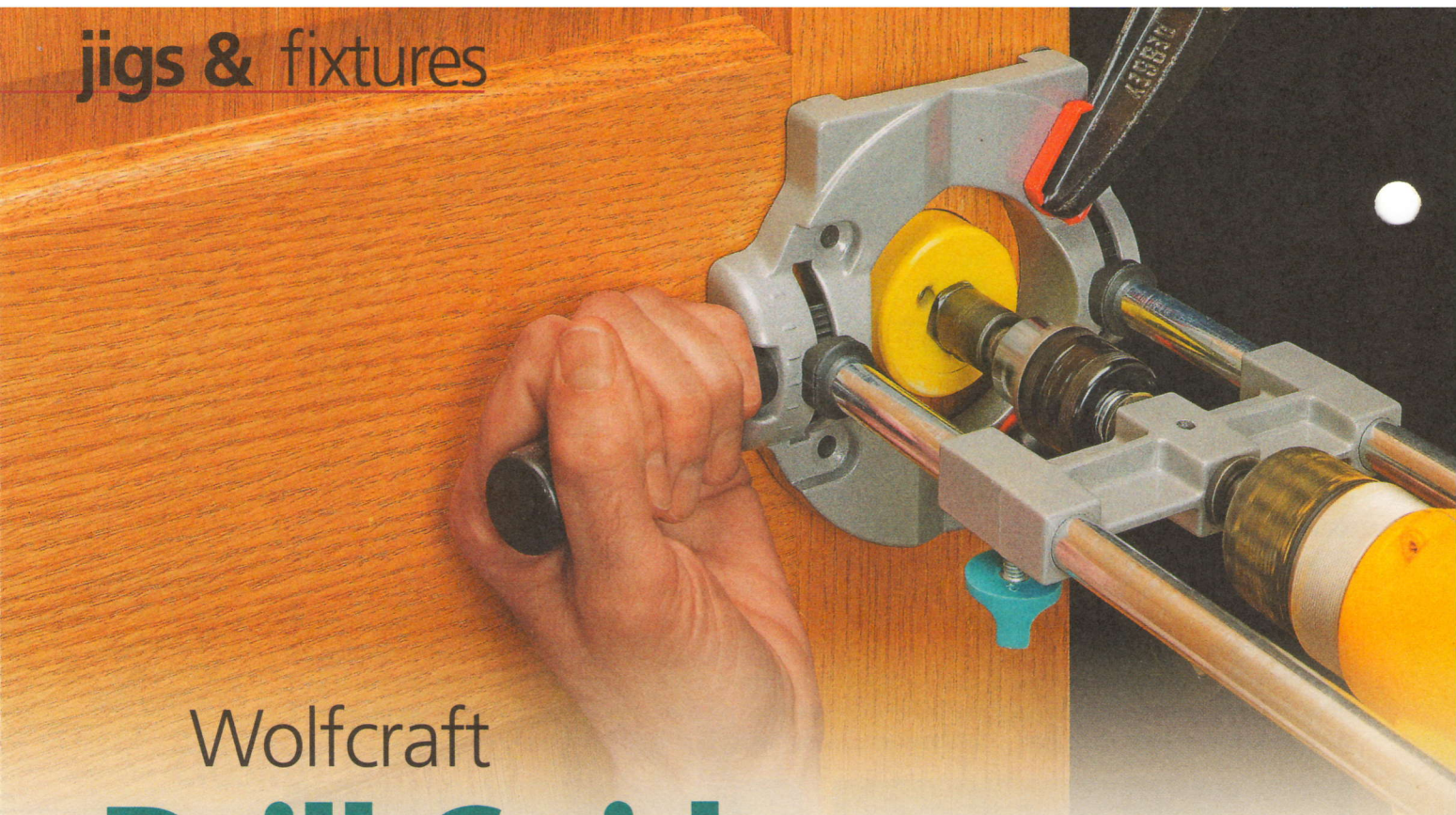

Wolfcraft Drill Guide

Bring drill press accuracy to your hand-held drill with this inexpensive and easy-to-use accessory.

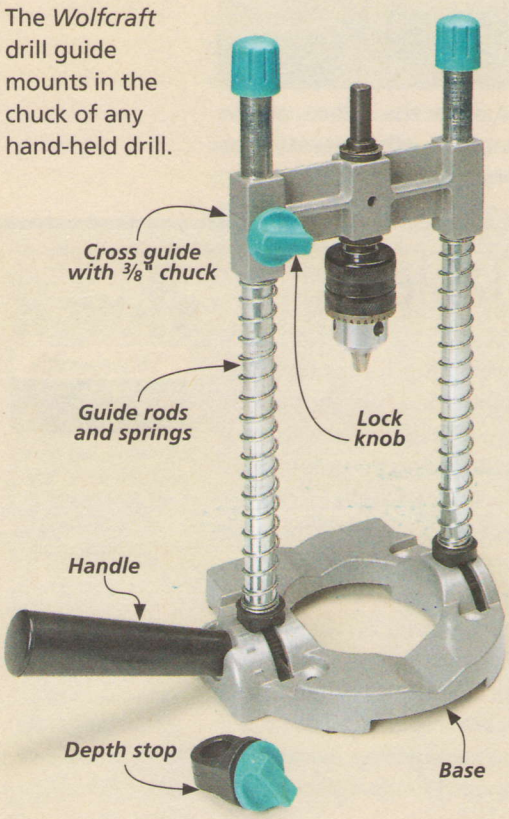

▼ The *Wolfcraft* drill guide mounts in the chuck of any hand-held drill.

When it comes to drilling holes for a project, a drill press is usually my first choice. But sometimes, a hand-held drill is more convenient and practical — particularly if you're dealing with large workpieces that exceed the capacity of your drill press.

The challenge with using a hand drill, however, is drilling straight, square holes (especially deep ones). Fortunately, there's a simple, low-cost solution. A drill guide, like the one shown above, makes drilling straight holes by hand just about foolproof.

A drill guide is nothing more than a jig that mounts to the end of your drill and guides it in a straight path. Think of it as a set of training wheels for your drill.

There are several makes of drill guides on the market, but they all work on the same principle. The one shown here is my favorite and is made by *Wolfcraft* (see page 51 for sources). It sells for around $25. This same guide is also sold through *Sears* under the *Craftsman* label.

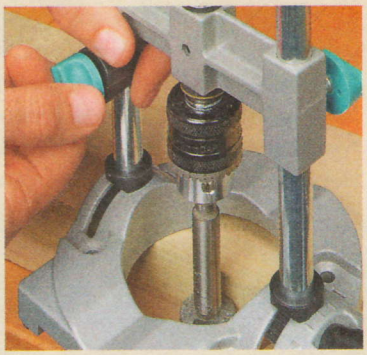

▲ An adjustable depth stop allows you to drill holes to a predetermined depth.

As you can see in the photo at left, the design of the *Wolfcraft* guide is really pretty simple. The jig consists of a pair of guide rods mounted to a round base.

A drill chuck mounted in a cross guide slides on these two rods.

To use the jig, you simply attach your drill to the shaft of the chuck. Then insert a drill bit in the chuck jaws. (You can use any type of bit with the guide, up to 2⅞" in diameter.) A pair of coil springs helps to support the drill over your workpiece until you apply downward pressure, much in the same way that the springs on a plunge router work.

A detachable handle allows you to hold the guide in place during use. And a removeable depth stop is included for drilling holes to a precise depth. (You'll need to remove the springs to use the depth stop.)

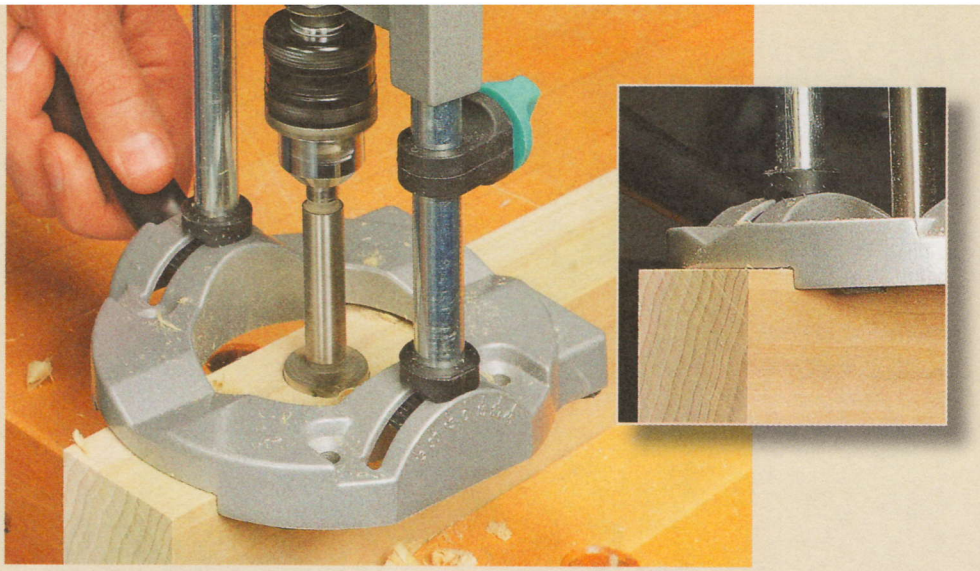

▲ A shallow notch on the underside of the base (inset photo) allows you to automatically center the bit on the edge of a workpiece by simply rotating the base of the guide.

APPLICATIONS

There are a number of situations where I find a drill guide invaluable. For starters, it's really handy if you have to drill holes in a workpiece that's too large to take to a drill press. A good example is drilling dog holes in the top of a workbench. The drill guide makes it easy to start the hole without worrying about the drill bit slipping and marring your project. And it also guarantees that your holes will be straight.

EDGE DRILLING. A drill guide can also be used to center holes on the edge of a workpiece. As you can see in the photo above, a wide, shallow notch is cast into the base of the guide. Rotating the base until the corners of the notch contact the sides of the workpiece automatically centers the drill bit on the edge. This is useful for drilling out mortises or drilling holes for dowel joints.

ROUND STOCK. Another feature common to most drill guides is a V-notch, also cast in the base. This allows you to drill centered crossholes in dowels or pipe, as shown in the lower left photo.

ANGLED HOLES. Drilling angled holes is always a bit of a challenge, even on a drill press. Trying to hold the workpiece steady on the tilted table of the drill press is difficult at best. But the *Wolfcraft* guide makes drilling angled holes quite simple.

As you can see in the photo at right, the base pivots on the end of the guide rods. All you have to do is loosen the knobs at the top end of the rods and pivot the base to the proper angle. A scale cast into the base helps you with setting the angle. Since the guide holds the drill at the desired angle, your workpiece remains flat on the workbench (center photo below).

If you don't own a drill press, the *Wolfcraft* drill guide is the next best thing. But even if you have a drill press, I'm willing to bet that you'll find plenty of uses for this jig. It's the kind of tool that doesn't take up much space or cost a lot of money, but can be a real lifesaver when the occasion calls for it. It's definitely a tool worth having in your shop. W

▲ A V-notch in the base of the guide allows you to drill centered holes in dowels.

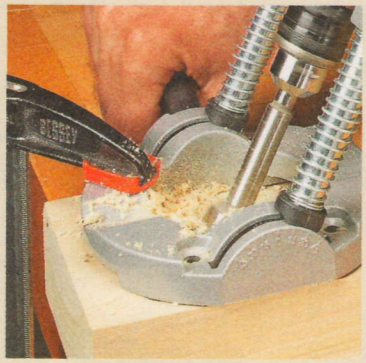

▲ The pivoting base of the drill guide makes drilling angled holes a snap.

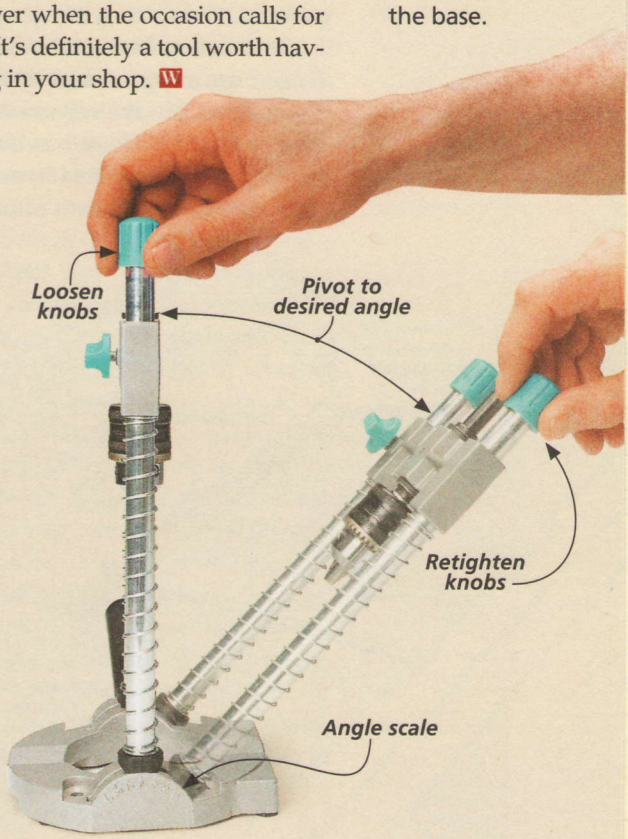

▼ To drill angled holes, simply loosen the rods and pivot the base.

perfect-fitting Box Joints

All it takes to make this super-strong joint is a simple shop-made jig, a dado blade, and a table saw.

I often turn to box joints when I need an effective and attractive way to join the corners of a case or box. This joint has interlocking pins that create extra glue surface to assure a strong, long-lasting joint. And the contrasting grain patterns really make a project stand out.

If there's one thing I like best about this joint, it's that I can cut it entirely on the table saw. The series of slots are cut with a dado blade or special box joint blade, to create equally spaced pins that fit snugly in slots on the adjacent workpiece. The cuts go pretty fast when you use a simple, shop-made jig.

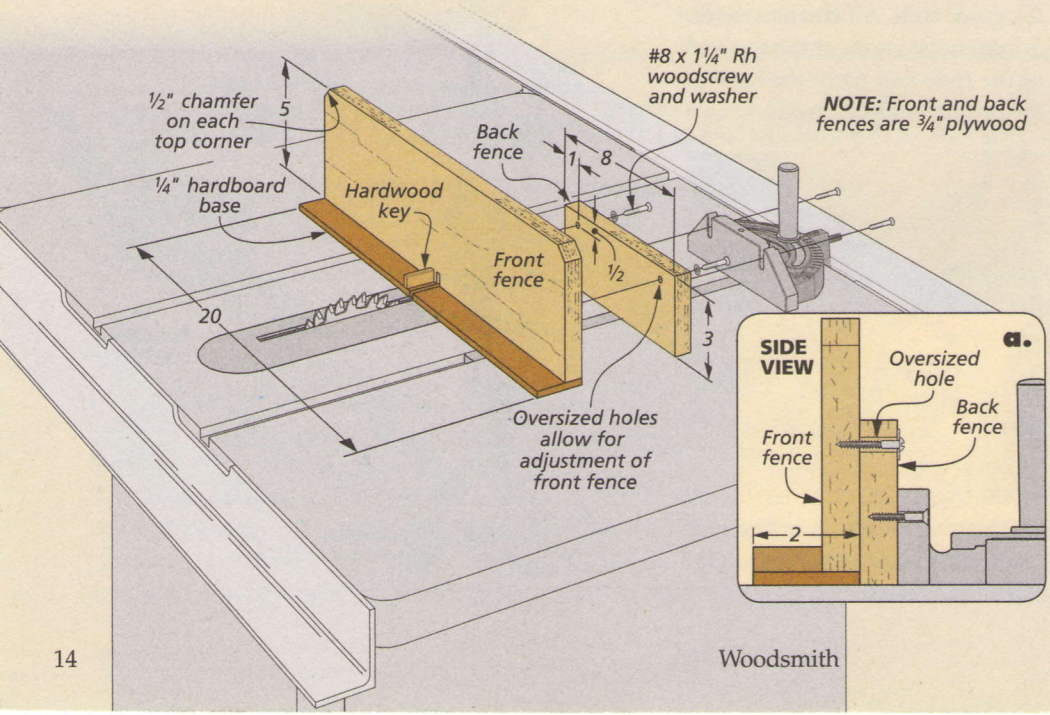

A SIMPLE JIG

In order for the box joints to look good and, more importantly, fit properly, you'll need to space the pins on each workpiece precisely. And the best way to do that is with a box joint jig.

If you take a look at the drawing on the left, you'll see that the jig consists of two fences attached to your saw's miter gauge. The rear fence is simply screwed firmly to the miter gauge. And the front fence is attached with screws through two over-sized holes, so you can easily make adjustments to dial in a good fit.

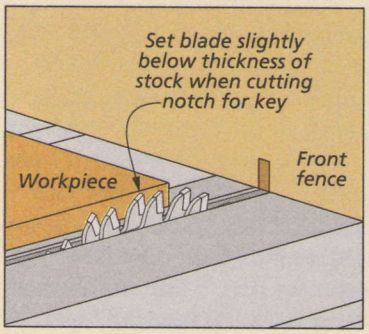

Key Notch. *Set the blade just below the thickness of your workpiece when you cut the notch.*

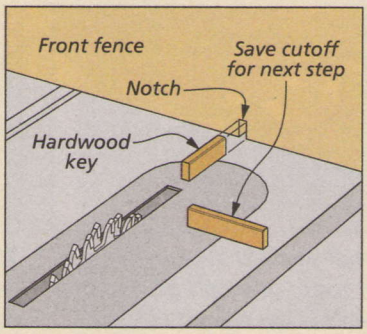

Cutting a Key. *Size the hardwood key to fit in the notch made by the dado blade in the front fence.*

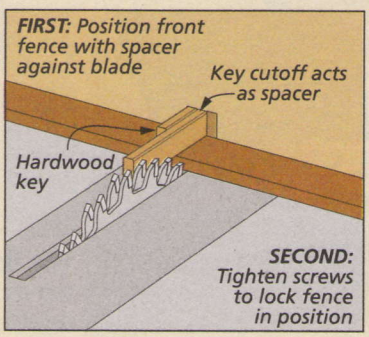

Space the Key. *The key cutoff should fit snugly against the saw teeth during setup.*

The front fence is your guide for cutting the workpieces. It has a key sized to match the width of the dado blade. The key is positioned the same distance from the blade as the width of the blade to create a pin between each cut. This setup guarantees that the pins align with the slots in the mating piece. The fence backs up the cut. And a sled attached to the bottom of the front fence ensures that the workpiece is level.

BUILD THE JIG. I chose Baltic birch plywood for both fences because it's flat and stable, and it takes screws well. Once you've cut the workpieces to fit your saw, drill the oversized holes in the back fence (detail 'a', opposite page).

SET UP THE JIG. Completing the jig is really a combination of construction and setup. So your next step is to choose the dado blade you'll use to cut the slots. For the wine rack on page 18, you'll need a ¼" dado blade. For slots with perfectly flat and square bottoms, you can purchase a box joint blade set, like the one shown in the box on the right. But any dado blade will get the job done.

To make a notch for the key, raise the blade to just under the thickness of the workpiece (½" for the wine rack). You'll readjust the height later when you cut the box joints. With the front fence not yet attached to the back fence, cut a notch roughly centered on the front fence (upper left drawing). You can simply hold the front fence against the back fence to make this notch.

With the notch cut, you can turn your attention to making the hardwood key. The key registers the workpiece as you make a series of cuts along the end to create the pins and slots. I cut an extra-long blank so I could use a piece of it to set the spacing between the key and the saw blade later. Size the key to fit the notch in the fence. It should fit snugly, but not too tight. When you're sure of the fit, cut it to length and glue it in the slot in the front fence. Save the remaining piece of the key for the final setup steps.

BASE. With the key seated in the notch, you can glue the base to the bottom of the front fence. This base provides a flat surface for the workpiece to rest on while you make the box joints on the saw.

SET THE SPACING. To finish the setup, you'll need to space the key the correct distance from the blade. This is where the remaining length of the key comes into play. Place the cutoff portion of the key against the teeth of the saw blade and slide the fence over until the fixed key butts against it (right drawing, above). Again, this should fit snugly, but not tight against the saw blade. When the key is the proper distance from the dado blade, you can drive the screws into the front fence.

With the jig built and the setup completed, you can move on to make a test cut first, and then cut the final box joints in your project. I think you'll find the work goes pretty fast once you have the jig set up and ready to use.

Worth a Look: Box Joint Blade

If you're looking for precise setups for common box joint sizes, then the *Freud Box Joint Cutter Set* is what you want.

The teeth are brazed to the blade off center so this set can cut precise slots at ¼" or ⅜", as shown in the drawing below. Plus the blade tips are ground to give you flat-bottom slots every time.

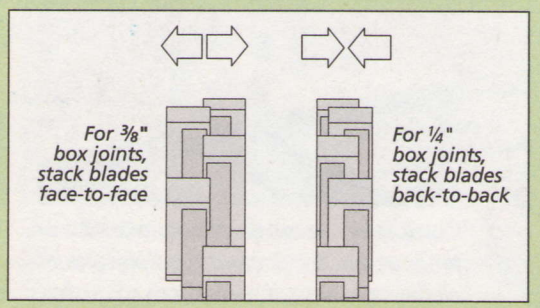

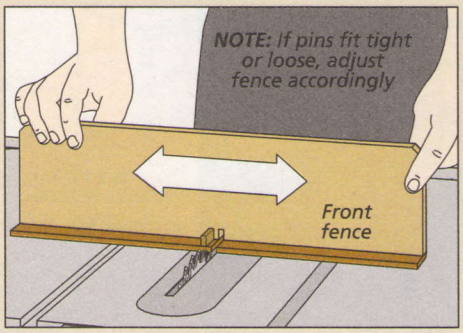

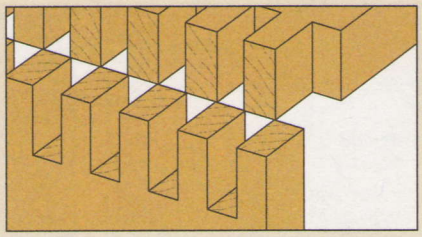

Too Tight. *If you find the joint requires too much force, or won't go together at all, move the key toward the blade.*

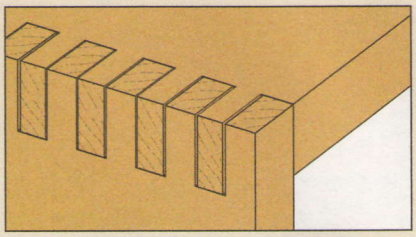

Too Loose. *If there are noticeable gaps between the pins, adjust the fence to move the key away from the blade.*

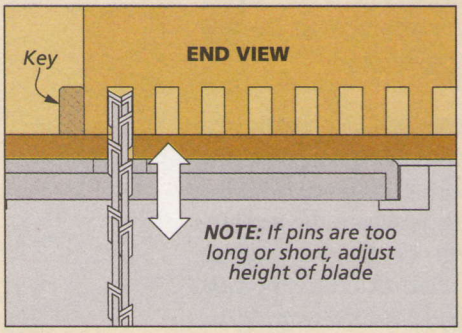

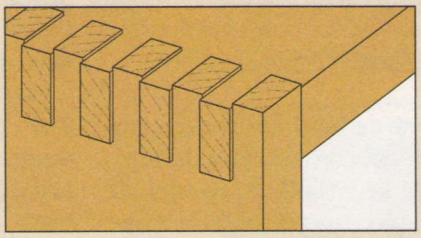

Long Pins. *If the pins protrude too far (more than 1/32"), you'll need to lower the blade to correct this.*

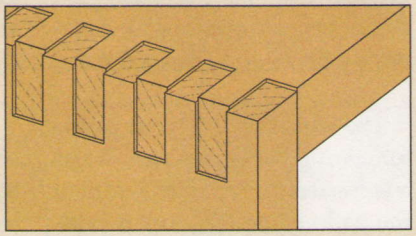

Short Pins. *Short pins are the result of the blade being too low. Simply raise the blade to correct the problem.*

Now you're ready to put your jig to the test by making the box joints. After some test cuts, you'll be on the way to the glueup.

LABEL THE WORKPIECES. Before you start cutting, you'll want to label each end and the top and bottom of the workpieces. This will help you keep the workpieces in the proper order while you're making the box joints.

TEST CUT. With joinery this exact, it's always a good idea to make a couple test cuts. I started the process with test pieces milled to the same thickness and width as my project pieces. When you're ready to make your first cut, raise the saw blade to 1/32" over the thickness of the workpiece. I did this so that the pins were just a little long. Then I can sand the ends of the pins after the glue up and remove any glue squeezeout. (Remember to take the thickness of the sled into account when you're setting the blade height.)

There are a couple things to note as you make your first cut. Make sure you hold the workpiece tight against the fence at all times. And make sure the end of the workpiece is seated flat

First Cut. *Maintain a firm grip to keep the workpiece in position against the fence and tight against the key.*

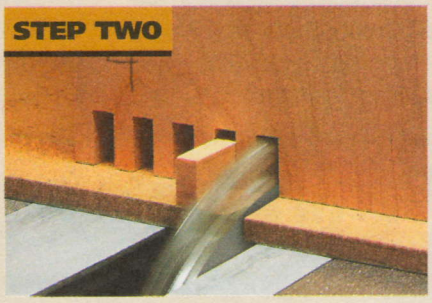

Cut & Repeat. *As you move the workpiece after each cut, make sure the bottom edge stays flat on the sled.*

Cut the Mating Piece. *Flip the workpiece around to act as a spacer to cut the initial notch in the mating piece.*

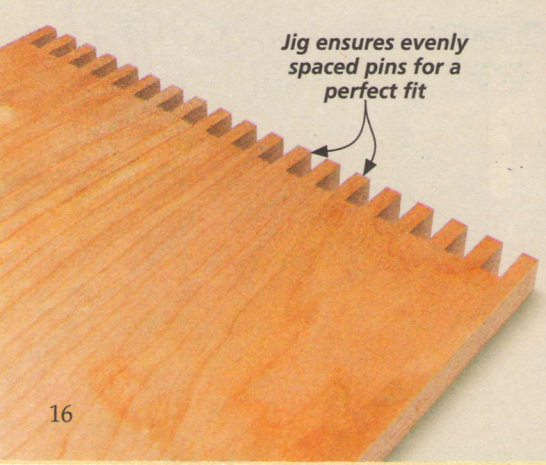

Complete Second Workpiece. *Continue across the second workpiece until all the slots are cut.*

Trim to Fit. *If needed, trim the workpieces so that each one ends with a full pin or notch for a more finished look.*

against the sled. This consistency ensures that all the pins and slots will be identical in size.

CUT. To make the box joints, you'll cut a series of pins and slots along the end of the workpiece. The first slot is cut with the edge of the workpiece against the key, as shown in Step 1 at the bottom of the opposite page. When that slot is cut, fit it over the key and make the next cut. Then continue across the workpiece until all the slots are cut (Step 2).

ADJOINING SIDE. When the slots are cut in one workpiece, flip the workpiece around and use the first pin as a spacer to start the mating workpiece (Step 3). Continue cutting slots until you've reached the end of the second workpiece.

TEST FIT. When all the pins are cut, you can check the fit of the test joint. You should be able to insert the pins in the slots with gentle hand pressure. If you have trouble with the fit, take a look at the drawings at the top of the opposite page for some tips. A joint that's too loose won't hold well and could come apart. Likewise, a joint that fits too tight could cause the wood to split at the slots once the glue is added.

TRIM THE EDGES. Even though the pins and slots are the same size, each one may be just a hair smaller or larger than you intended. When this happens, you'll find you have an odd-sized pin or slot at one edge of the piece. In order to keep the case even, you can trim the edges of the workpieces so that a full pin or slot remains, as shown in Step 5 on the opposite page.

For tips on gluing and assembling box joint jigs, take a look at the box on the right. When assembly is done, you can sand the ends of the pins flush with the case and remove any glue squeezeout.

Box joints are an attractive option to join case or box corners. And I think you'll find they'll stand up to heavy loads and a lifetime of use, too. W

How-To: Gluing it Up

All the painstaking setup and test cuts you've gone through will finally pay off when it's time for assembly. Box joints that are cut properly square up easily. But you'll still need to work quickly once you apply the glue. You can use a slow-setting glue like liquid hide glue or *Tightbond III* to give you a little more open time during the glueup.

GLUE. The advantage of box joints is the large amount of gluing surface the interlocking pins and slots create. So it only takes a small amount of glue to create a solid joint. In fact, you don't need to put glue on every surface. I like to use a brush to apply a small amount of glue to the top of each pin, as shown in the top right photo.

As you assemble the joint, the glue will spread to other surfaces. And you will get some glue squeezeout. I place masking tape next to the pins (top photo). This will trap any squeezeout on the inside corners where it's tough to remove. When the glue has skinned over, pull the tape off and the glue will come with it (bottom photo).

CLAMPING. Clamping box joints is a little different than clamping other types of joinery. Since the pins are slightly long, you won't be able to apply clamps directly to the corners of the case. So when you're ready to apply the clamps, you'll find clamping blocks come in handy. Take a look at the center photo to see how I used blocks to clamp the case. You can see that the blocks give you the ability to apply pressure to close the joint in both directions without touching the pins.

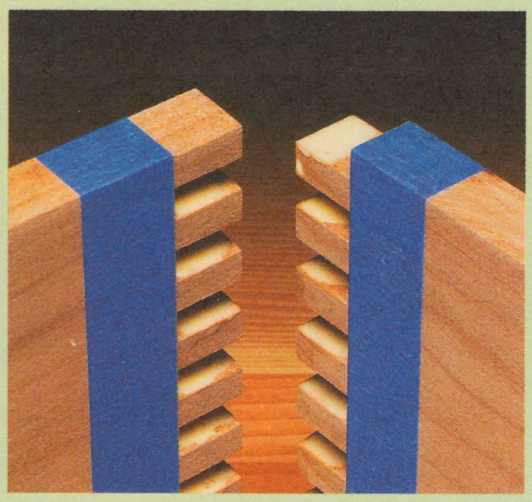

▲ By applying glue only to the top of each pin, a strong long-grain to long-grain joint is created at each pin and slot.

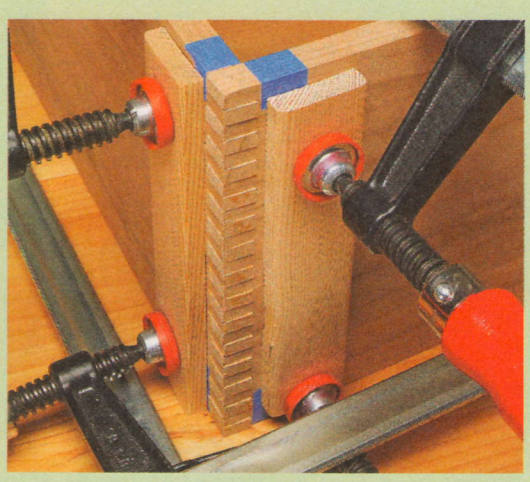

▲ Clamping blocks distribute the force of the clamps evenly, without interfering with the proud-standing pins.

▲ After the glue has set, removing the tape reveals a clean joint, with no cleanup required.

With its longer ► open time, *Titebond III* is excellent for gluing box joints.

space-saving Wine Rack

Traditional construction and modern accents combine to create style and practicality in one small package.

A wine rack is a great addition to any kitchen or dining room. But if you don't have space for a large wine rack, then I think you'll like this one. This rack takes the concept of a basic wine crate and pumps up the style. It sits on a countertop or buffet so it's always ready when company arrives.

Just because the rack is compact doesn't mean I cut back on the details. The case is assembled with box joints, which make any project look impressive. Plus, I added contrasting feet and edging on the face of the rack.

From a woodworking point of view, this project will give you a chance to hone your skills. And if you're new to making box joints, I've included some helpful hints in a separate article on page 14.

I've also included design options with this project. If a low-profile rack would better suit your space, check out the Designer's Notebook on page 23.

box joint CASE

The wine rack is built by constructing a case and then adding a series of dividers and shelves. Later, you'll add edging and feet to complete the rack. The biggest challenge is cutting the box joints. But before you can start on the box joints, you'll need to size your workpieces.

PANELS. I glued up panels for the sides, top, and bottom. Starting with an extra-wide and extra-long blank, square up the ends and cut the four pieces to identical length. Later you can trim the extra width to even up the case. I used the simple table saw jig shown on page 14 to cut the box joints. You can see how it's done in the box below.

DADOES. When you've completed the box joints, go ahead and cut the dadoes for the dividers and shelves you'll add later. The top and bottom each have two dadoes, but the sides only have one. It's a good idea to mark each piece before you cut them, so you won't get the workpieces confused when you start the glueup.

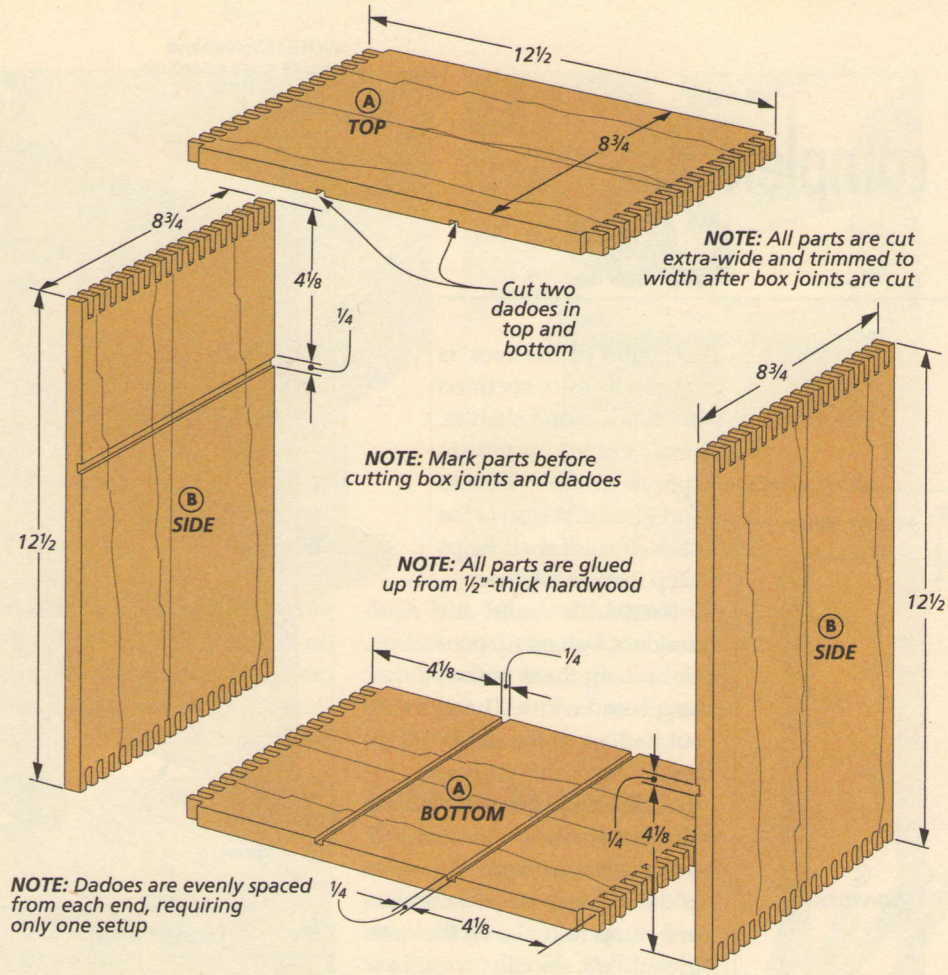

GLUE UP. You can glue up the case before adding the shelves and dividers. This way, you'll have an easier time squaring up the case without extra workpieces in the way. But before you add any glue to the joints, dry assemble the case. After testing the fit, you can add the glue.

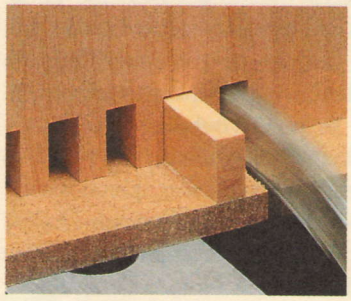

◄ For a step-by-step article on cutting perfect-fitting box joints, see page 14.

How-To: Cut the Case Joinery

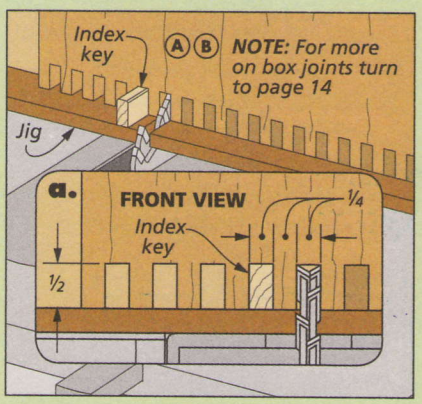

Cut Slots. *The secret to perfect box joints is having the key, dado blade, and space between sized identically.*

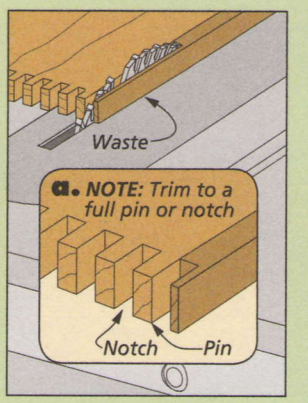

Trim Edges. *When the box joints are cut, trim the edges to final width.*

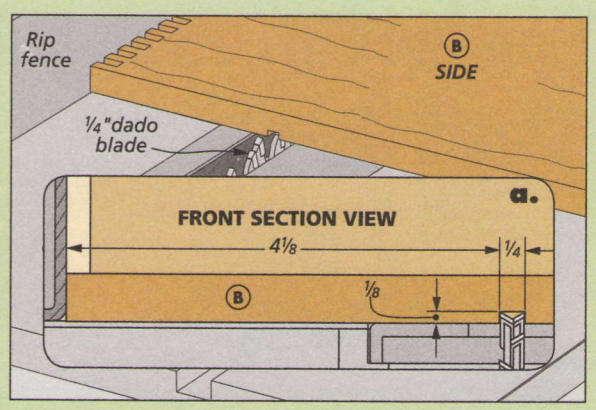

Dadoes. *You can use the same dado blade to cut the dadoes in the case sides, top, and bottom. The dadoes are equally spaced so only one set up is needed.*

complete the CASE

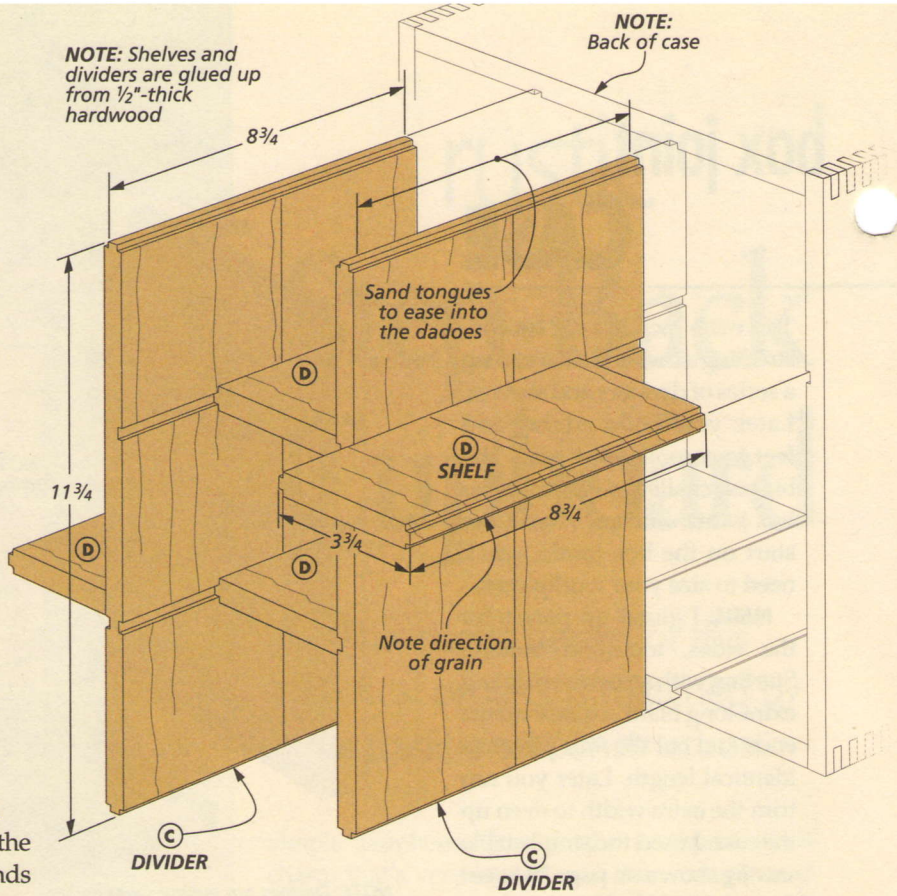

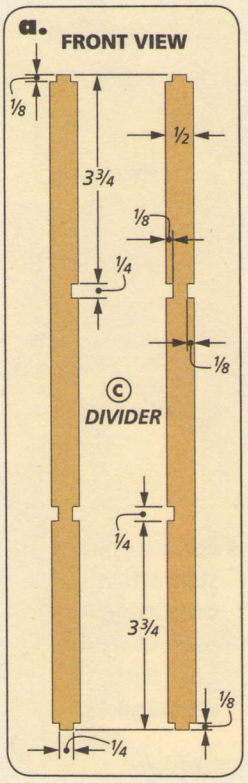

The inside of the rack is organized into sections with dividers and shelves. These create separate spaces to store bottles and glasses. A stop at the back of each shelf helps keep items contained.

DIVIDERS. To build the dividers, I glued up panels and cut them to final length and width. Then I cut dadoes in the dividers to hold the shelves (box below). Here again all the dadoes are located the same distance from the ends of the dividers, so you can use one setup to make all the cuts (detail 'a'). Finally, you can cut the tongues on the ends of the dividers to match the dadoes in the case. This is shown in the center drawing in the box below.

SHELVES. The shelves are also cut from glued up panels (note grain direction in main drawing). Once they're cut to size, you can cut centered tongues to fit the dadoes (detail 'c').

ASSEMBLY. The dividers and shelves slide into the dadoes from the back of the case. To make this easier, I lightly sanded the tongues, as shown in the right drawing below. Keep checking the fit as you sand them and then glue them in the dadoes. Apply the glue sparingly to the back of the dadoes. As you slide the pieces in from the back, the glue will spread to cover the tongues and you'll get less squeezeout. While the glue dries on the case, you can get started making the edging for the front of the rack.

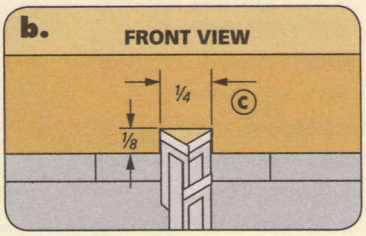

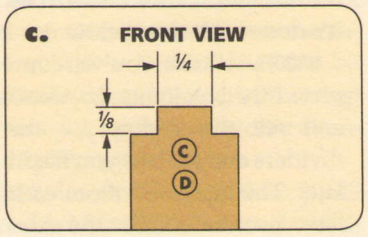

How-To: Cut Dadoes & Tongues

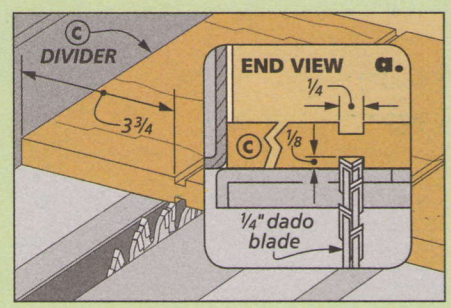

Divider Dadoes. *The two dividers have a series of dadoes that hold the shelves in place on the rack (detail 'a').*

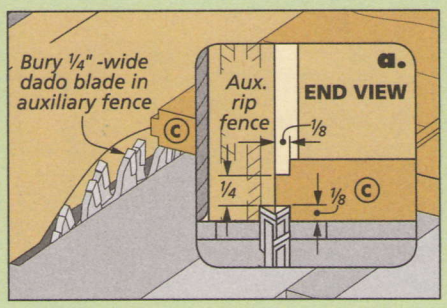

Tongues. *Each end of the shelves and dividers are held in place with tongues cut to match the dadoes on the case.*

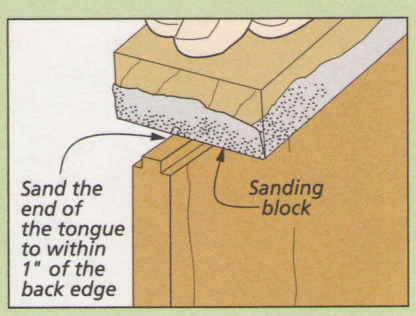

Ease the Tongues. *Lightly sand the ends to within 1" of the back edge of the tongue, for an easier fit.*

EDGING. The edging on the face of the case serves two purposes. First it provides visual appeal through the contrasting wood. And second, the edging covers the tongue and dado joints where the shelves and dividers join.

As you can see in the box at the bottom of the page, I ripped the edging from a wide board. Once the edging is cut, it's centered on the front edges of the case. At first, getting it aligned exactly looked like it was going to be a challenge. So to solve the problem, I used a couple shop-made guides to help me glue the edging in place.

GUIDES. If you take a look at the right drawing in the box below, you'll see the guides are nothing more than blocks of wood with a rabbeted edge. I left a 1/8" lip on the guides to center them over the edge of the case. Then I inserted the edging between the guides so that it was perfectly centered on the edge.

ATTACH EDGING. To attach the edging, I worked from the outer edges of the case to the inside. I glued the outside vertical edging first. Then I cut the remaining edging to fit, following the step-by-step process shown in the main drawing at right.

With the edging attached, there are just a couple details to add before the project is complete.

STOPS. There are stops at the back of each shelf to keep stored items contained on the shelves.

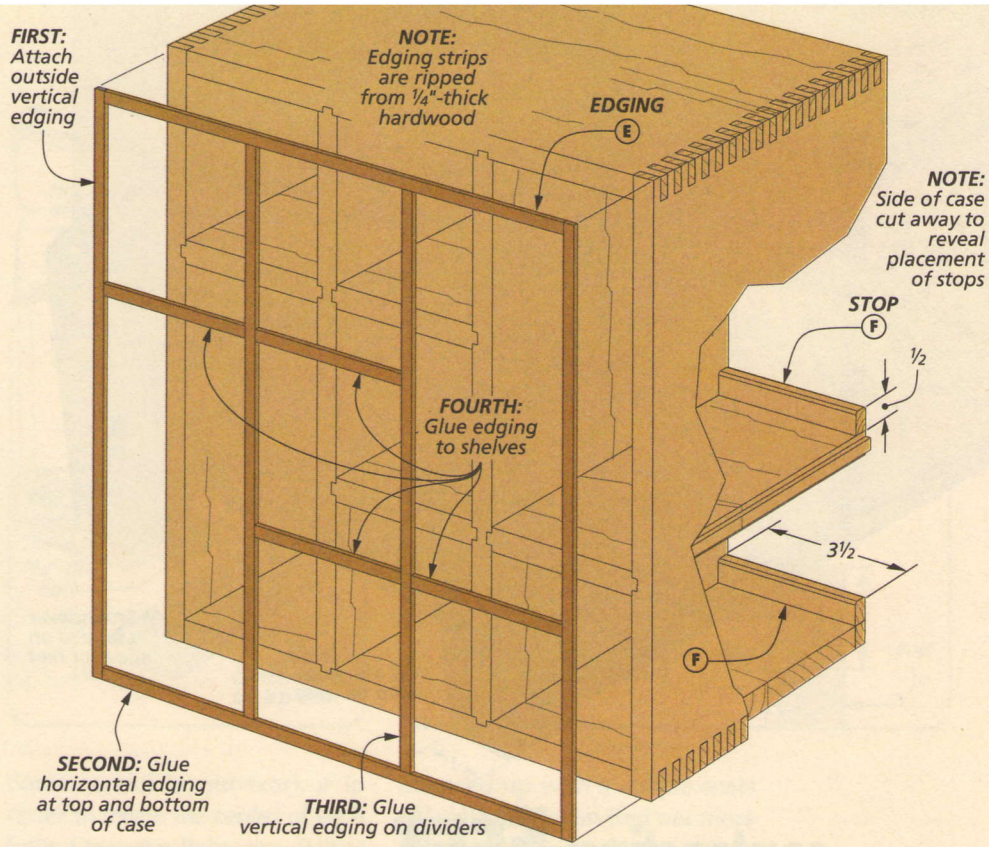

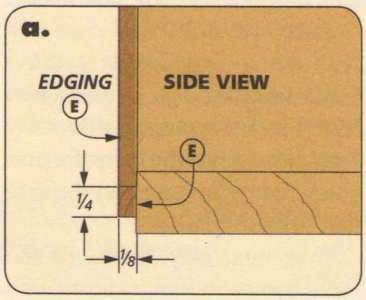

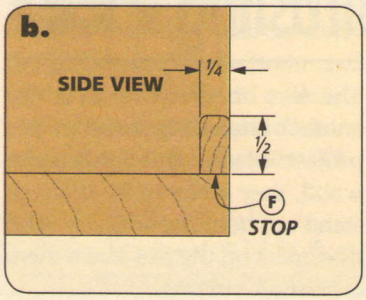

These stops are just strips of hardwood with a small roundover on the top edges.

Cut the stops to length to fit the openings. Then lightly round over the top edges with sandpaper. Finally, glue the stops in place flush with the back edge of each shelf, as shown in detail 'b'.

There's just one final thing to take care of on the case. And that's to add the contrasting feet. You'll find more about the details for this on the next page.

Making & Adding the Edging

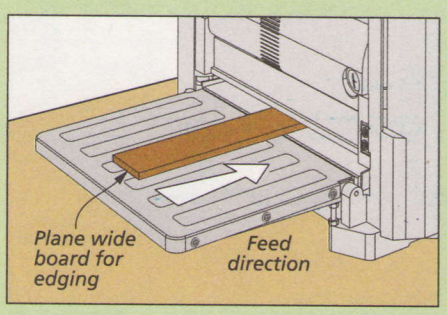

Plane Edging. *Plane an extra-wide board to 1/4" thickness before cutting it into strips for the edging.*

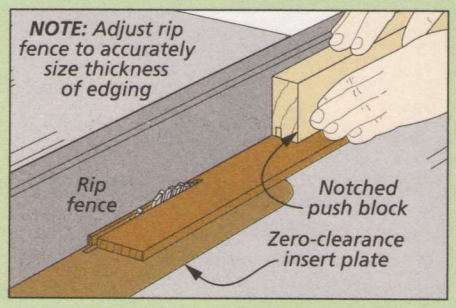

Rip Edging. *Adjust the rip fence to the thickness of the edging and rip the individual strips free.*

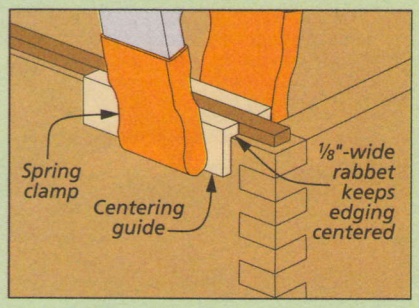

Center Edging. *Clamp two guides on either side of the edge and insert the edging in between to center it.*

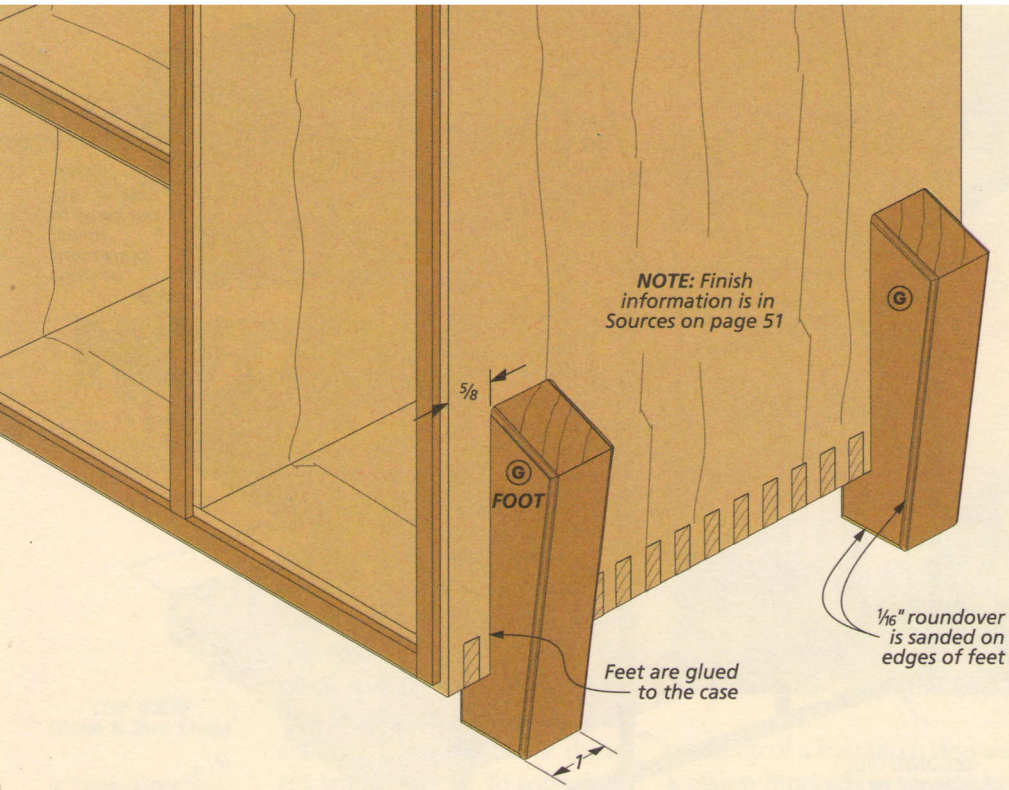

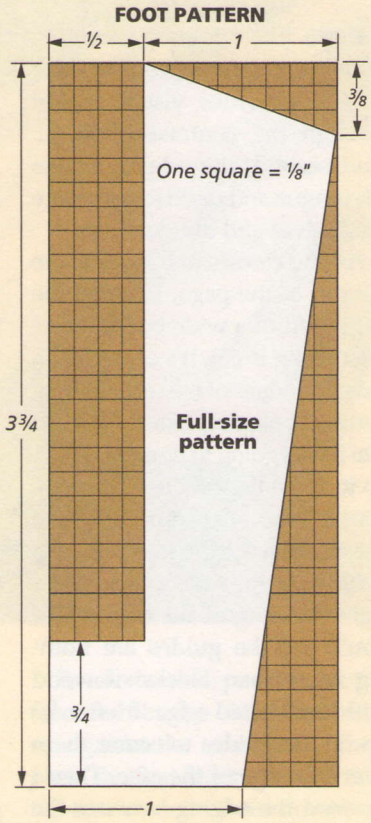

contrasting FEET

The feet on the wine rack are another interesting detail of this project. Made with contrasting wood, they really make the rack stand out from the ordinary. And the tapers on the feet make them even more striking.

SHAPE THE FEET. Shaping the feet is pretty straightforward. But to make them easier to cut, you can use the the full-size pattern in the upper right corner.

To make the feet, I started with a couple of extra-long blanks. I found it easier to work with a blank long enough to make two feet. Start shaping the feet by cutting a wide dado to form a notch that wraps around the case (left drawing, below).

Your next step is to cut the tapers on each foot. I did this on the band saw (center drawing below). Then you can sand to the line to remove the blade marks. I taped the feet together to sand them, so they were identical. Take a minute to sand a 1/16" roundover on the feet. When the feet are done you can glue them to the case.

GLUE FEET. I used a simple spacer to position the feet from the edge accurately. It's a scrap piece with a 5/8"-wide rabbet cut in the edge. As you can see in the right drawing below, I placed the spacer on the edge of the case and aligned the foot for the glueup.

Once the feet are in place, all that's left is to add the finish. There's more about the finish in Sources on page 51. Then to complete the set, you can fill the rack with your favorite wines and special serving glasses. W

How-To: Shape the Feet

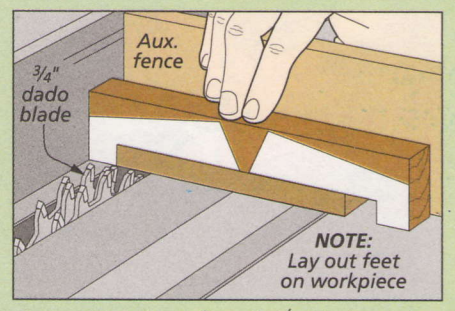

Cut a Notch. *A 3/4" dado blade makes short work of the notch in the foot blank. Use the template as a cutting guide.*

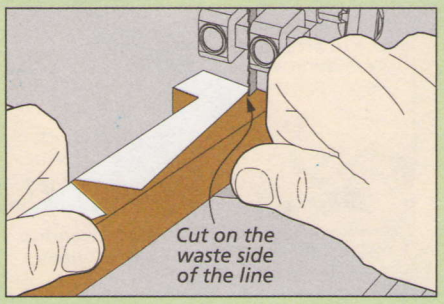

Shape the Feet. *Cut the tapers on the top and side of the foot at the band saw. Clean up the saw marks with sandpaper.*

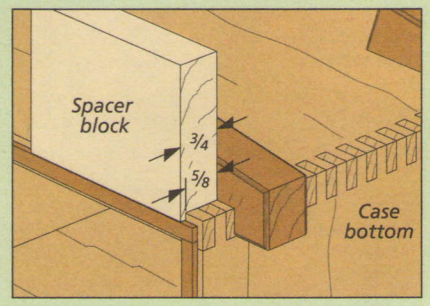

Position Feet. *Position the feet 5/8" from the front and back of the case. A simple spacer helps with this task.*

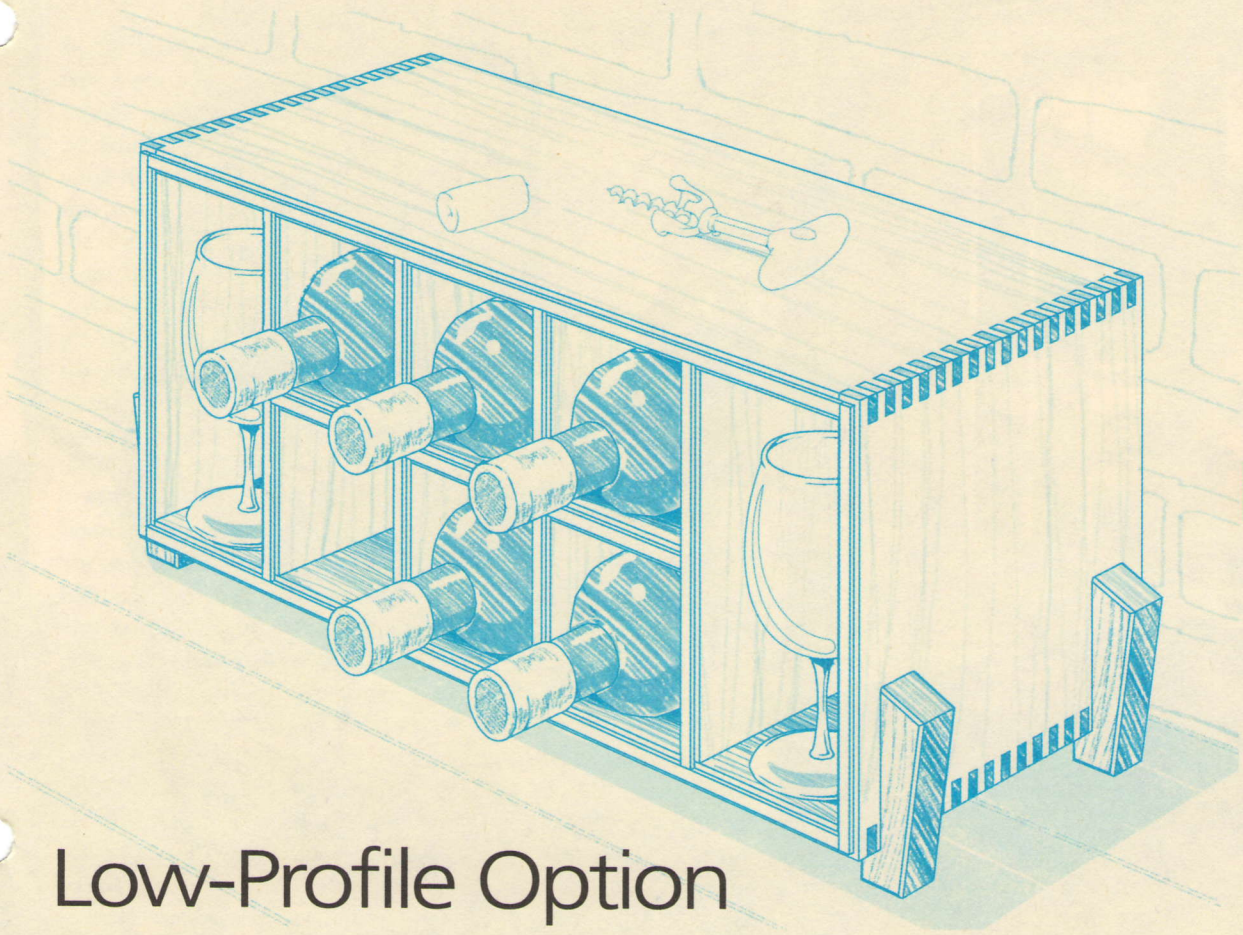

Woodsmith GO ONLINE EXTRAS

To download detailed drawings of this wine rack, visit our website at Woodsmith.com

Low-Profile Option

If you have a wider space for a countertop wine rack, then take a look at the modified version shown above. It has room for up to six bottles and several glasses, but it sits lower than the rack in the main article, so it may be a better fit for your space.

For this one, I used the same joinery and details as the square rack. While it's a simple task to modify the plans for this longer rack, our designers have done all the work for you. You'll find the complete drawings for this rack on our website at Woodsmith.com.

Materials, Supplies & Cutting Diagram

A	Top/Bottom (2)	1/2 x 8 3/4 - 12 1/2	**E**	Edging (1)	1/4 x 1/8 - 84 (rgh.)
B	Sides (2)	1/2 x 8 3/4 - 12 1/2	**F**	Stops (7)	1/4 x 1/2 - 3 1/2
C	Dividers (2)	1/2 x 8 3/4 - 11 3/4	**G**	Feet (4)	1 x 1 1/2 - 3 3/4
D	Shelves (4)	1/2 x 8 3/4 - 3 3/4			

1/2" x 5" - 96" Cherry (Two Boards @ 3.3 Sq. Ft. Each)

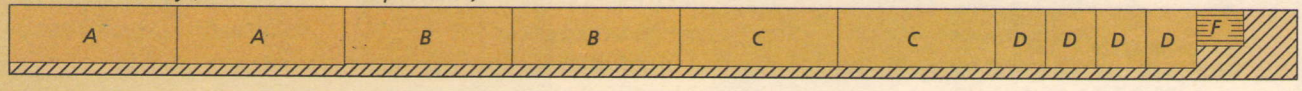

1" x 3 1/2" - 24" Wenge (.7 Bd. Ft.)

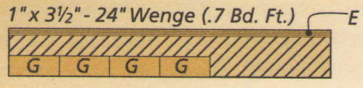

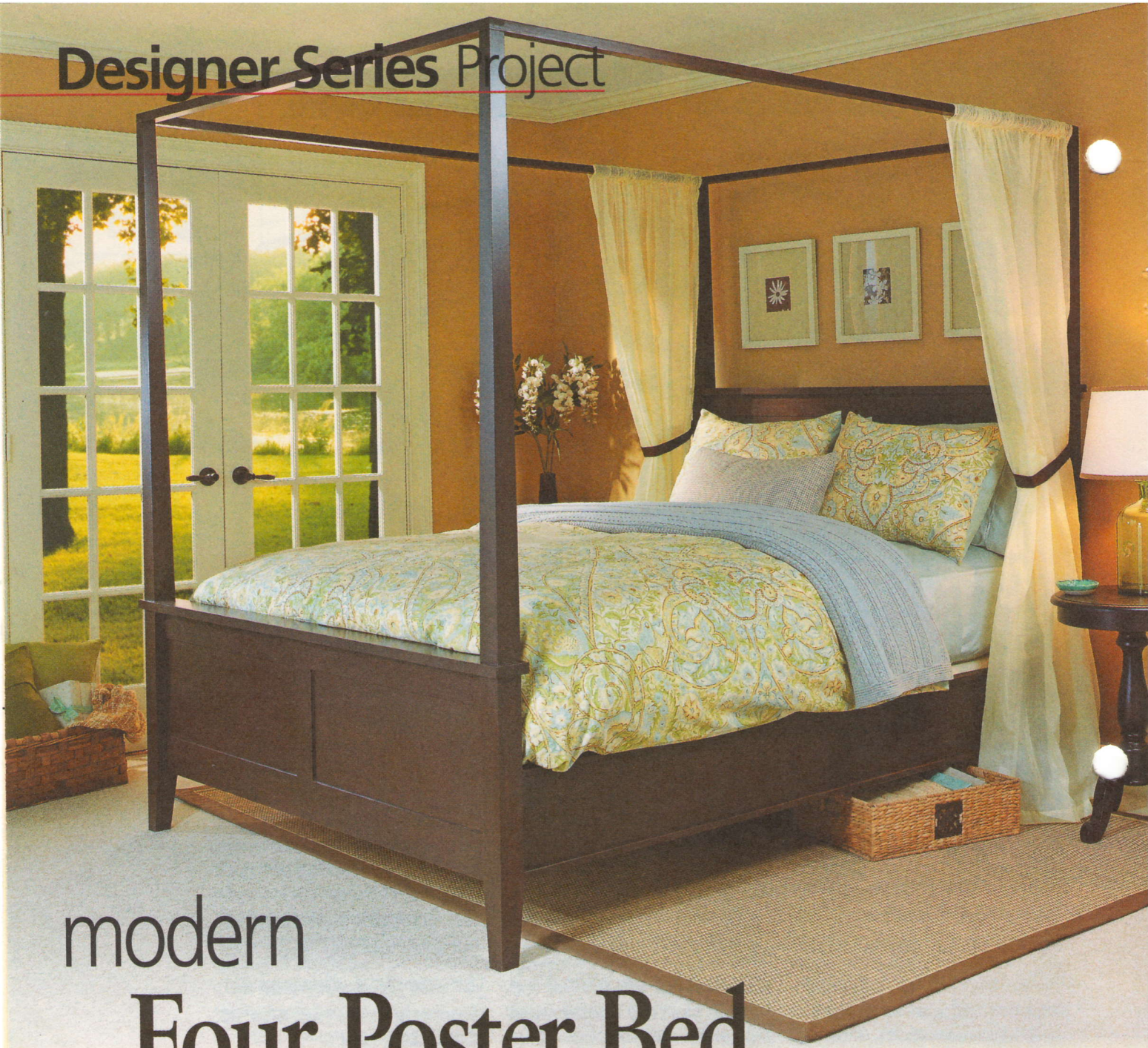

modern Four Poster Bed

Combine your woodworking skills, straightforward construction, and elegant styling to create a restful retreat for years to come.

At some point, just about every woodworker is called upon to build a bed. Whether it's for yourself, one of your children, or a guest bedroom, finding the right design can be a struggle.

The bed shown in the photo above offers a timeless solution. From the tall tapered posts to the frame-and-panel headboard and footboard, these classic design elements make this bed a showpiece that's at home in just about any bedroom decor.

In addition to the style considerations, you'll appreciate the ease of construction and attention to the overall structure. Since the bed will be moved at some point, you can't use permanent joinery to attach the headboard and footboard to the rails.

Fortunately, modern knockdown hardware makes it possible to accommodate almost any design. I've chosen some very common hardware and assembly ideas for this bed. But there are still plenty of woodworking challenges to keep you busy.

CONSTRUCTION DETAILS

OVERALL DIMENSIONS: 87¾"L x 67"W x 80"H (Queen Size)

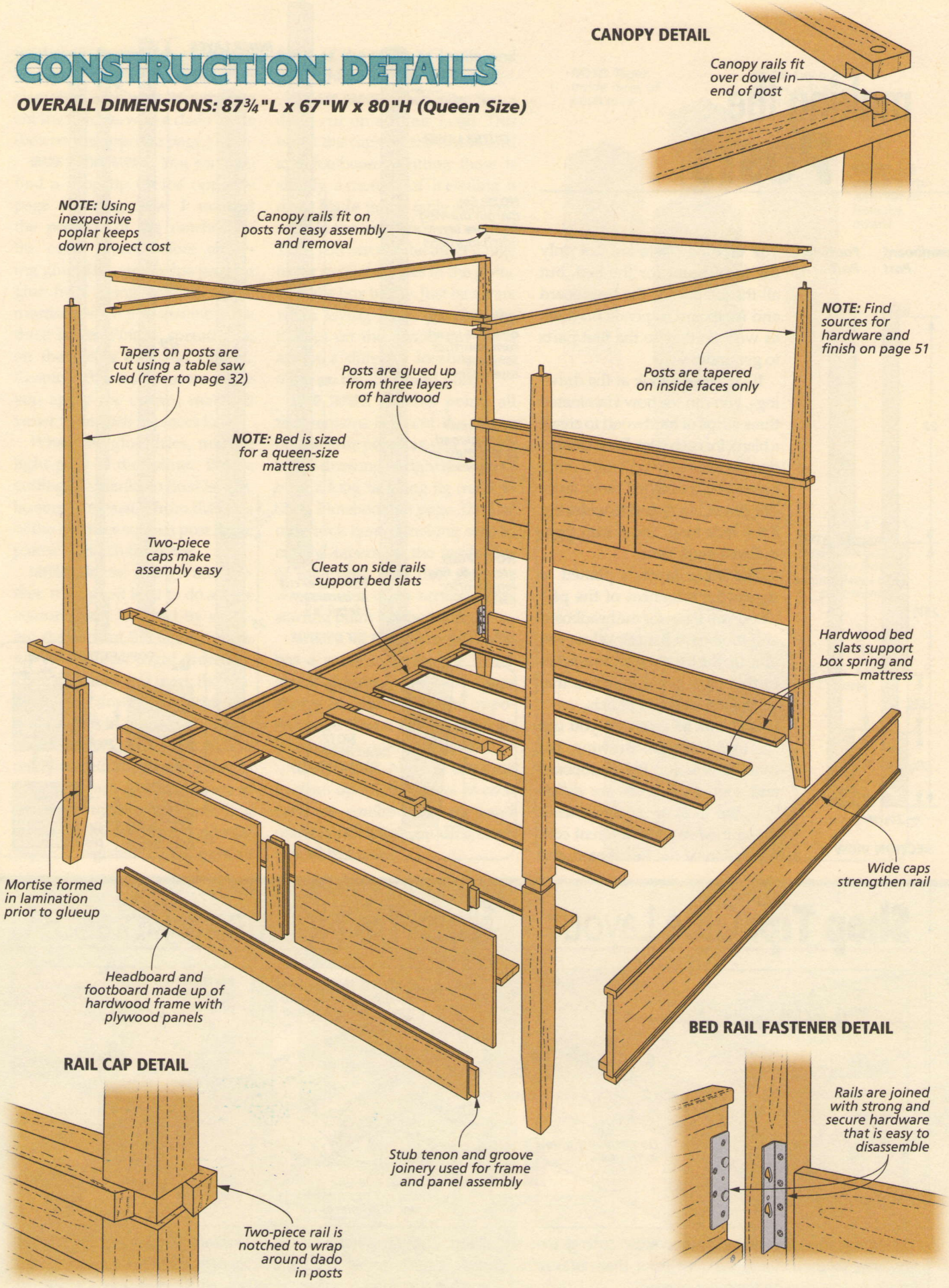

making the POSTS

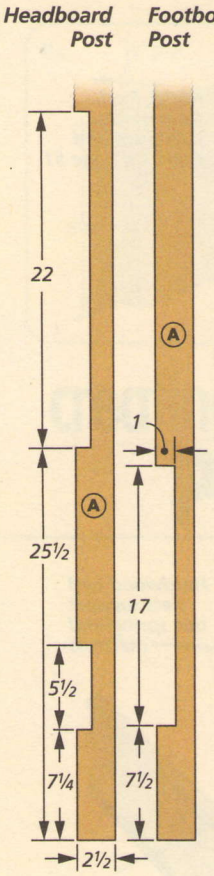

The tapered posts are not only the focal point for the bed, but all the joinery for the headboard and footboard depends on them as well. So they're the first parts to get under way.

If you take a look at the drawings, you can see how I laminated three strips of hardwood to create a blank for each post. Each lamination consists of two 1"-thick outer layers and a notched inner layer. The pieces are ripped to width but left a little long. You'll trim them to final length later.

The inner layer is planed to match the thickness of the plywood you'll use for the headboard and footboard panels. When you glue up the leg blanks, the notches in this layer form mortises that secure the rails and panels.

START WITH THE INSIDE. As you can see in the margin drawing, the inner layers for the headboard and footboard posts are different. The location of the notches accommodates the different configuration of the headboard and

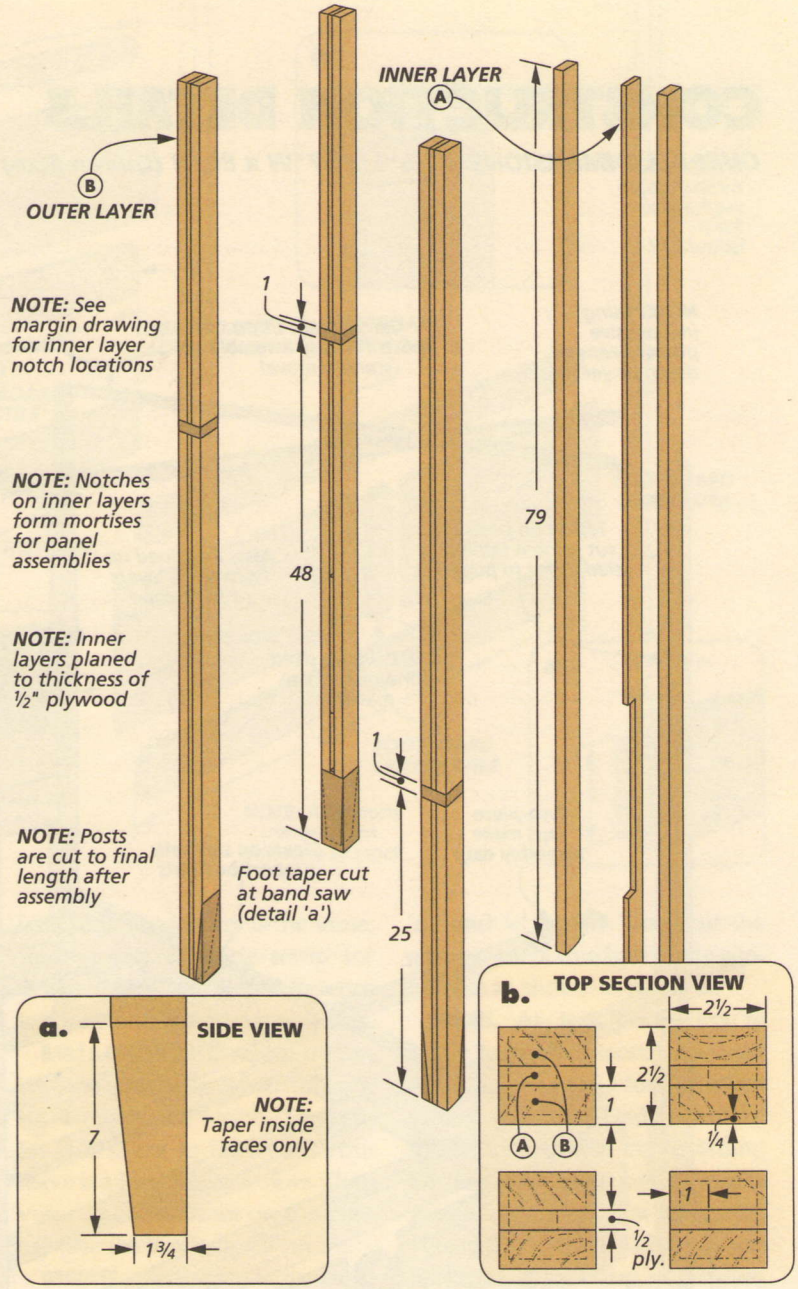

Shop Tip: Glue Layout

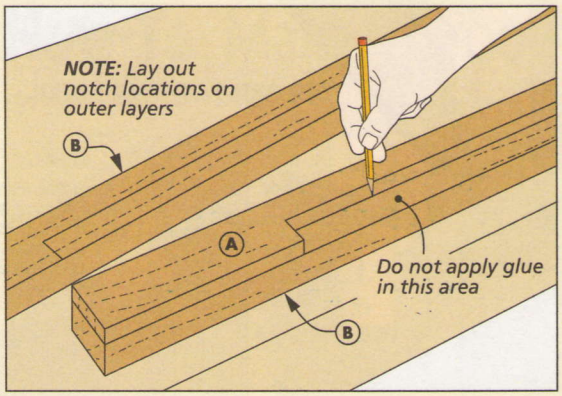

Marking the "No-Glue" Zone. *After cutting the notches in the inner layers that form the mortises, trace their outline on the outer pieces.*

How-To: Notches & Holes

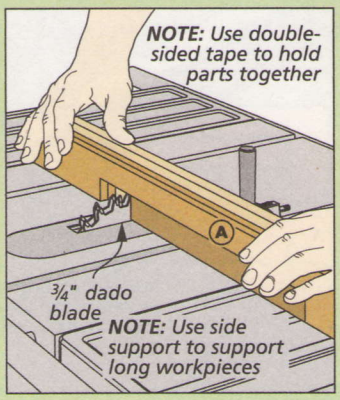

Gang Cut. *Tape each pair of inner layers together to cut the notches that form mortises.*

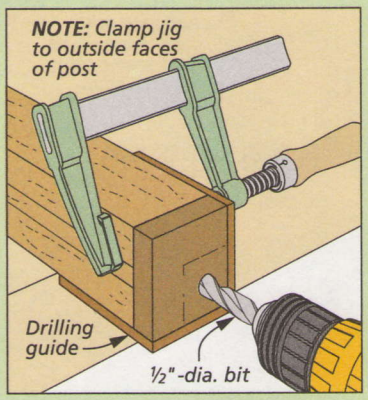

Drilling a Centered Hole. *A simple drilling guide registers against the post sides.*

footboard assemblies. I started by laying out these notches then clamping each pair together to cut the notches with a dado blade (box on the opposite page.)

MARK BEFORE GLUING. You can also find a shop tip on the opposite page showing how I marked the position of the notches on the outer layers before applying glue. This step helps prevent glue from being applied to the mortises when you assemble the three layers. Finally, spread glue on the pieces and add clamps. Keeping the layers even while you apply the clamps makes it easier to smooth the faces later.

When the glue dries, make a light pass at the jointer. Before cutting the blanks to final length, be sure to measure from the ends of the mortises so each post in the pair will match the other.

LAYOUT. Before you go any further, it's a good idea to do a little layout work. I started by marking the ends of the tapers on the top of each post (right drawing). Then go ahead and mark the center for the dowel that holds the canopy rails in place.

DRILL THE TOPS. After that, you're ready to drill the dowel holes in the top of each post, as you see in detail 'a.' I made a simple drilling guide (right drawing, opposite page). It registers on the outside faces of the posts to locate and guide the bit as you drill.

CUT THE DADOES. Each post has a dado cut on all four faces. This holds the caps on the headboard and footboard. Cutting these is simply a matter of installing a dado blade in the table saw and setting the rip fence as a stop. Then you can use the miter gauge to cut perfect dadoes in the posts, as in the box below. Just be aware when laying them out that the dadoes on the headboard posts are in a different location than those on the footboard posts.

LONG TAPERS. At this point, all that remains is to cut the tapers on the four posts, as you can see in the drawing at right. For this, I built a long tapering jig (refer to Shop Notebook on page 32). The only trick here is making sure to cut the tapers on the *inside* face of each post. And note that the wraparound dado serves as the starting point for the tapers.

TAPERING THE FOOT. Each post also has a small taper on the lower end to form a decorative foot, as shown in detail 'a' on the opposite page. These short tapers can be cut easily on the band saw.

CLEANUP WORK. Now is the time to clean up the four faces of each post. A combination of hand planing and a little sanding takes care of this task.

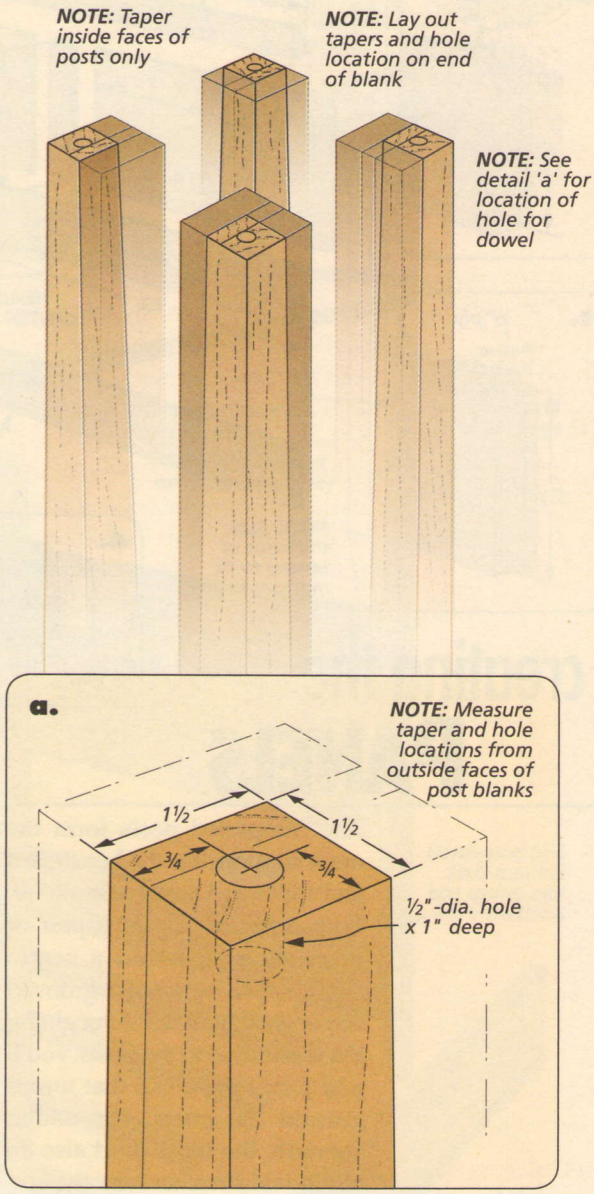

Dadoes & Tapers

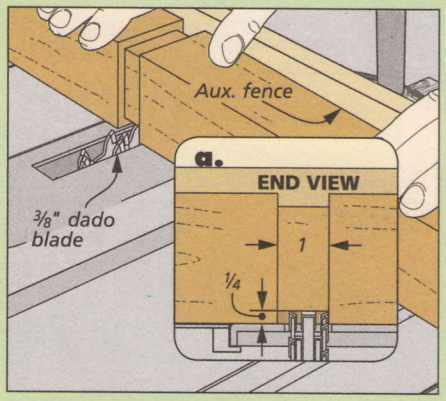

Dadoes for Caps. *Use the rip fence as a stop to accurately locate the wraparound dadoes for the caps you'll make later.*

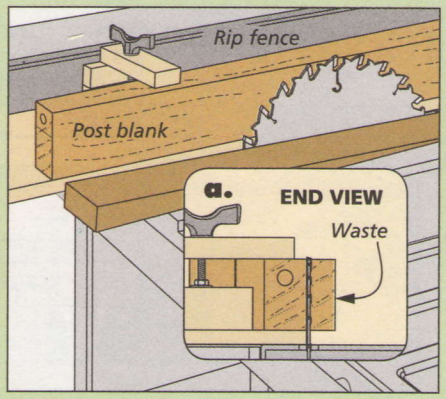

Cutting Long Tapers. *Use a taper sled (page 32) and a sharp rip blade to cut the first of the long tapers on the posts.*

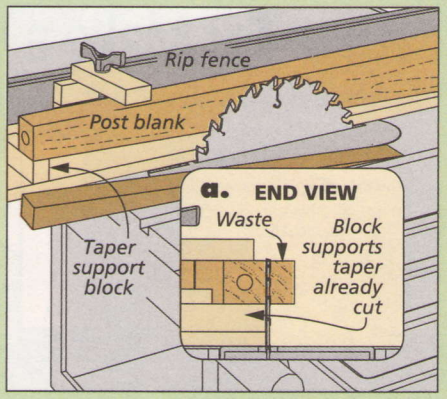

Second Taper. *To cut the adjacent taper, you'll need to place a support block under the end of the post.*

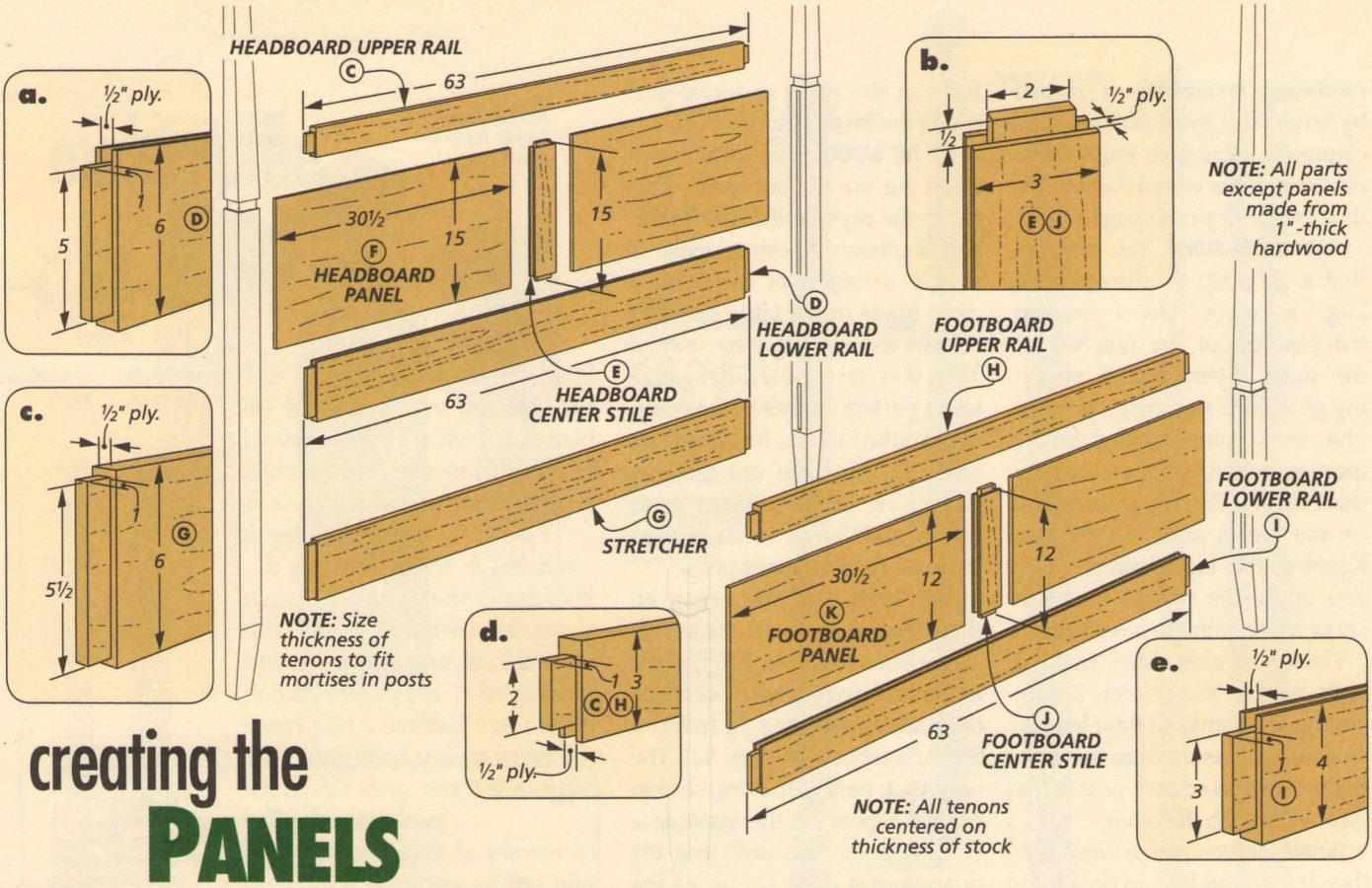

creating the PANELS

The completed posts form the main supports for the headboard and footboard panel assemblies. Both units consist of a pair of plywood panels and a center stile trapped between a grooved upper and lower rail. After gluing the assemblies to the posts, you'll add a two-piece cap that wraps around the posts. For added strength, the headboard also an additional stretcher near the bottom of the posts.

MAKING PANELS. The building procedure for both of the assemblies is similar. The joinery is the same, so you can use one setup for everything. The only difference is the overall size of the panels.

RAILS & CENTER STILE. I started by cutting the four rails and stretcher to final length and width. The center stile is cut to final width but leave it a little long for now. Then you can concentrate on the joinery (see the box below).

GROOVES. The first step is to install a ⅜" dado blade and cut centered grooves in the rails to hold the panels, as in details 'a,' 'd,' and 'e' above. Next, cut the grooves on both edges of the center stile as shown in detail 'b.'

TENONS. At this point, you're ready to cut the tenons on each piece. Once again, I turned to the table saw and the dado blade for this. You can start by installing an auxiliary fence on the miter gauge to help prevent tearout as you cut the tenons. I like to use the rip fence as a stop, measuring from the fence to the outside edge of the dado blade. Set the blade height by sneaking up on a good

How-To: Make a Groove & Tenon

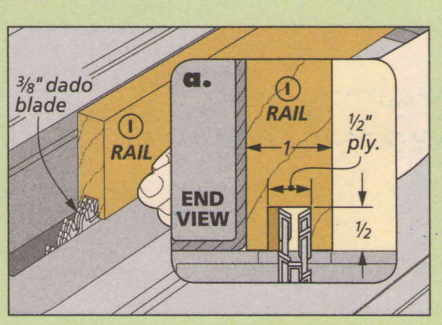

Centered Groove. *Use a ⅜"-wide dado blade to cut a centered groove. Flip the workpiece between passes.*

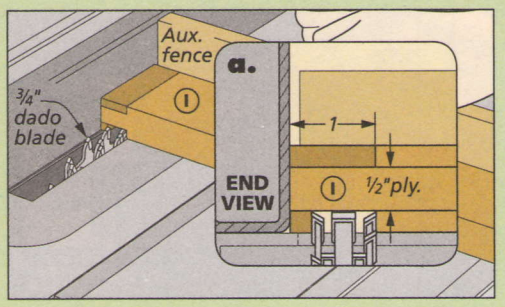

Tenon Length & Thickness. *Use the rip fence as a stop to establish the tenon length. Sneak up on the thickness by raising the blade.*

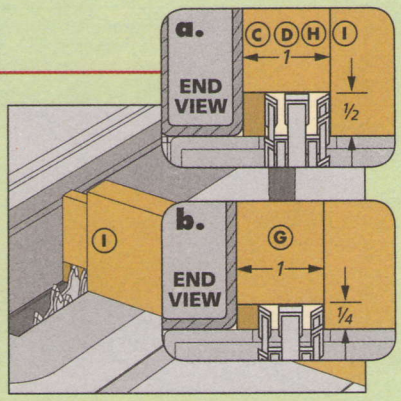

Two Shoulders. *Without moving the rip fence, adjust the blade height to cut the edge shoulders.*

fit for the grooves you cut earlier. Now you can cut foolproof tenons and be assured they're all exactly the same length and a snug fit. Take some time to study the details on the opposite page for the differing tenon dimensions on each of the pieces.

PANELS. A pair of plywood panels fill the frames. All you need to do is cut them to final size before gluing things up. And now is a good time to cut the stile to length and cut the stub tenons.

ASSEMBLY. Assembling the headboard isn't too difficult, but there are several pieces to get in place before applying the clamps. Dry-assembling first then taking things in stages during glueup makes the process go smoother.

Start by gluing up the rail and panel assemblies. When the glue dries, you can glue each assembly into the posts. Just remember to install the stretcher between the headboard posts while gluing the panel assembly in place.

ADDING THE CAPS. When the glue dries, you're ready to add the two-piece caps. The drawing above and detail 'a' show how each half of the cap is notched to fit into the dadoes you made in the posts earlier. For a less visible joint line, I ripped both pieces from the same board.

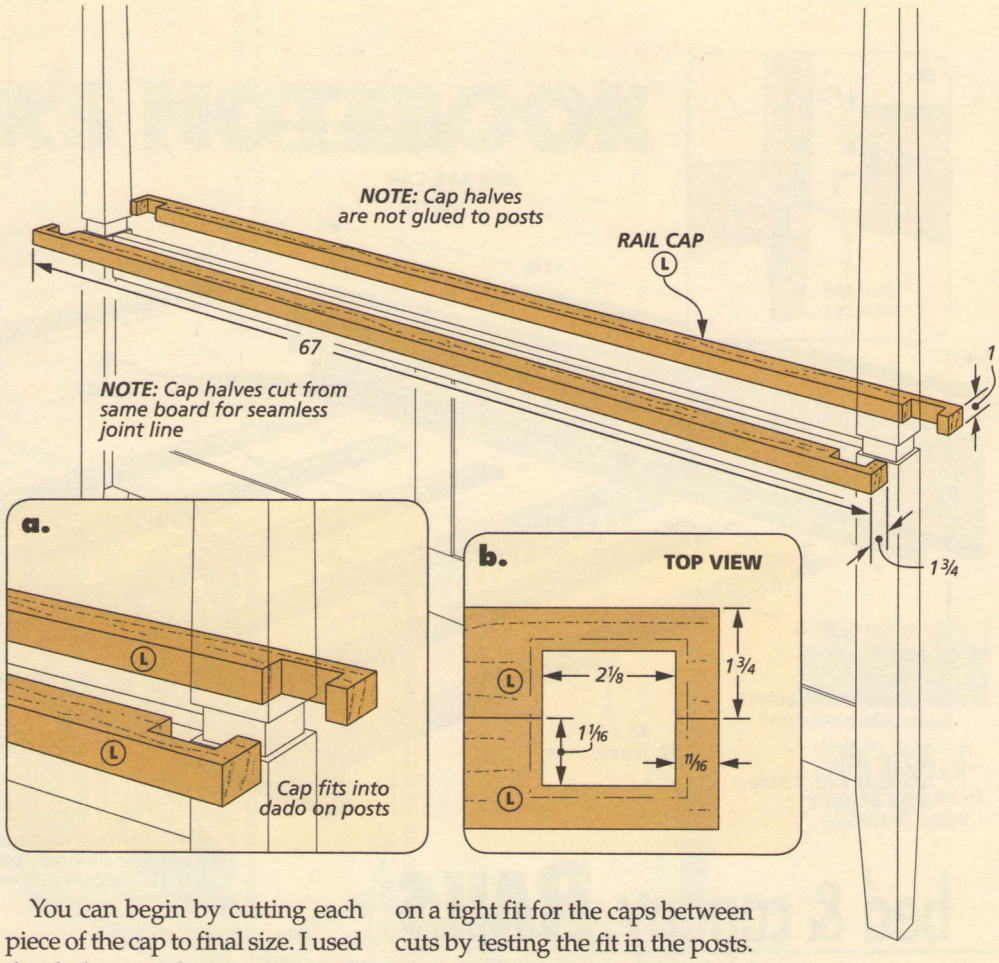

You can begin by cutting each piece of the cap to final size. I used the dadoes on the posts to mark the location of the notches. (Make sure the piece is centered before making the marks.)

The box below shows how I went back to the table saw and used a dado blade to cut the notches. I also taped the pieces together to make sure the notches were perfect mirror images of each other. As before, make sure to attach an auxiliary fence on the miter gauge to prevent tearout on the back side of the cuts. Sneak up on a tight fit for the caps between cuts by testing the fit in the posts. I made the notches extra deep and wide to make them easier to fit around the posts and allow for expansion and contraction.

FINAL ASSEMBLY. The right drawing below shows how to clamp everything together. The cap halves are glued together around the posts and onto the upper rail of the headboard and footboard panels. Short clamps work great for clamping the halves together while longer clamps hold them tight to the upper rail.

Two-Piece Caps

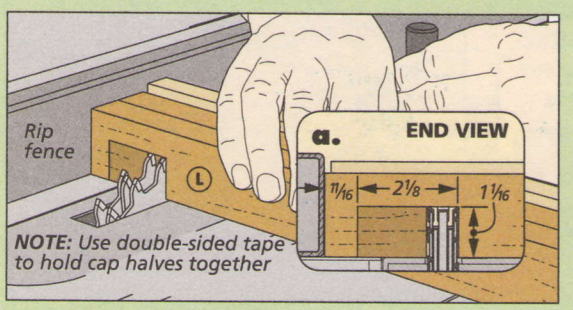

Identical Twins. *Clamp the two blanks for the cap rail to the auxiliary miter gauge fence. Use the rip fence to gauge the inside face of the notches.*

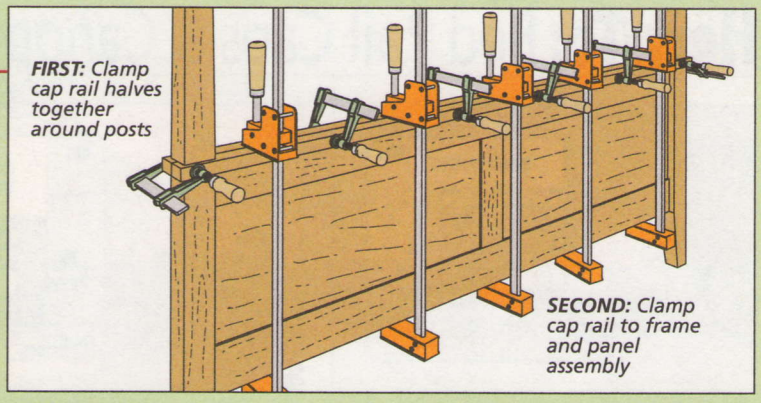

Multiple Clamps. *Apply glue to the inside edges of each cap half. Clamp the pieces around the dadoes in the posts and to the panel rail while clamping them to each other. No glue is needed in the dadoes.*

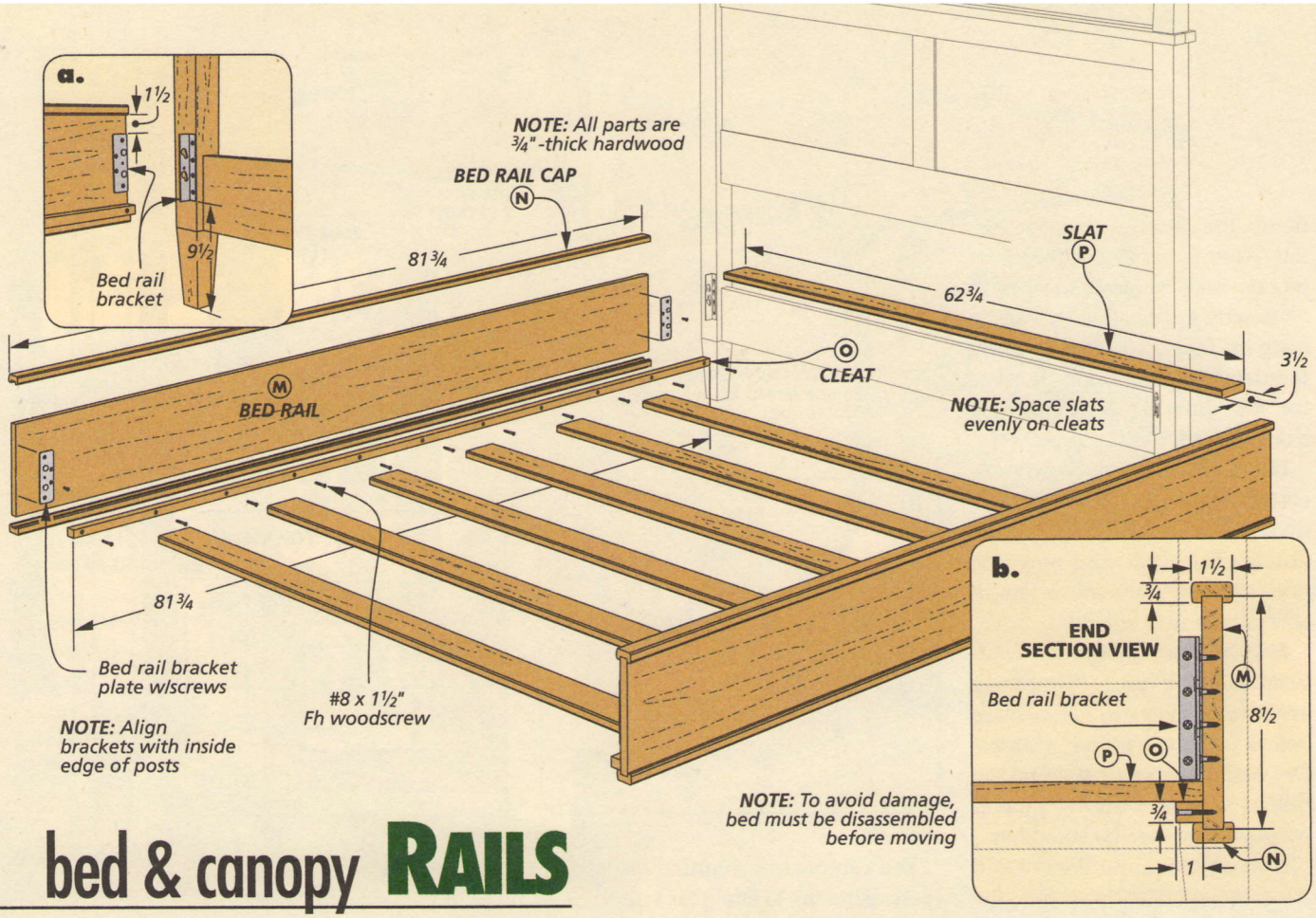

bed & canopy RAILS

To tie the headboard and footboard together, a pair of bed rails are needed. To give them plenty of strength (like an I-beam), I added caps to the top and bottom edges. After you finish the bed rails and add slats to support the mattress and box spring, the last task is to install a set of canopy rails around the top of the posts.

BED RAILS. You can get busy on the bed rails by selecting a couple of wide, straight-grained boards and cutting them to final size. As you can see in detail 'b,' I also added a pair of caps to each rail. The box below shows how I cut the long grooves and routed roundovers on the corners. After that, you can glue and clamp the caps to the rails.

SUPPORT CLEATS. Detail 'b' also shows the placement of a cleat on each bed rail. The cleat supports the set of slats that hold the box spring and mattress. After you cut both cleats to size, use glue and screws to attach them to the inside of the bed rails.

ADD THE HARDWARE. Now you're ready to attach the bed rail brackets in the corners and assemble the frame. Detail 'a' shows how the pieces fit together. The key here is to make sure the components are installed at exactly the same height on the posts. Spacer blocks will help you locate the parts to ensure level rails.

How-To: Bed Rail Caps & Canopy Rail Ends

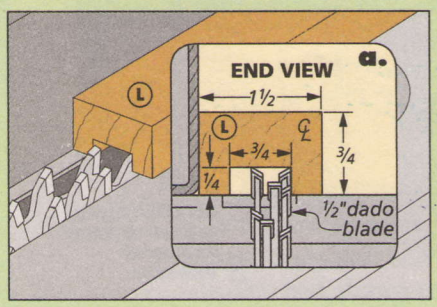

Centered Groove. *Use a ½" dado blade to cut a centered groove in the rail caps, flipping the workpiece for each pass.*

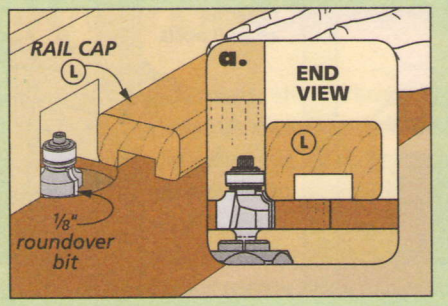

Rout Roundovers. *To ease the edges of the rail caps for looks and comfort, make a quick pass at the router table.*

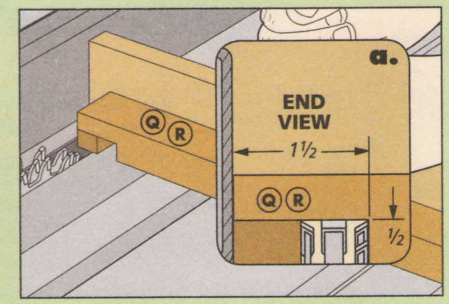

Half-Lap Joinery. *Use the rip fence as a stop and make several passes over a dado blade on the canopy rail ends.*

When everything is in place, test the fit by attaching the bed rails to the headboard and footboard.

SLATS. Finally, you can cut the seven slats that fit between the bed rails. But before you do, it's a good idea to square up the frame and measure the actual distance between the bed rails to make sure the slats slide in easily.

ADDING THE CANOPY RAILS. With the frame set up, the last bit of construction is the set of four canopy rails. These are fit with half-lap joints and secured with a dowel at the top of each post.

I started by installing a short dowel in the hole at the top of each post. Then, after taking a length measurement from the outside face of each pair of posts, I cut the rails to final size. Detail 'a' above shows you the dimensions for the half-lap joinery at the ends.

The holes at the ends of each canopy rail slip over the dowels to lock them in position. (Don't bother gluing them so they can be removed to install curtains.)

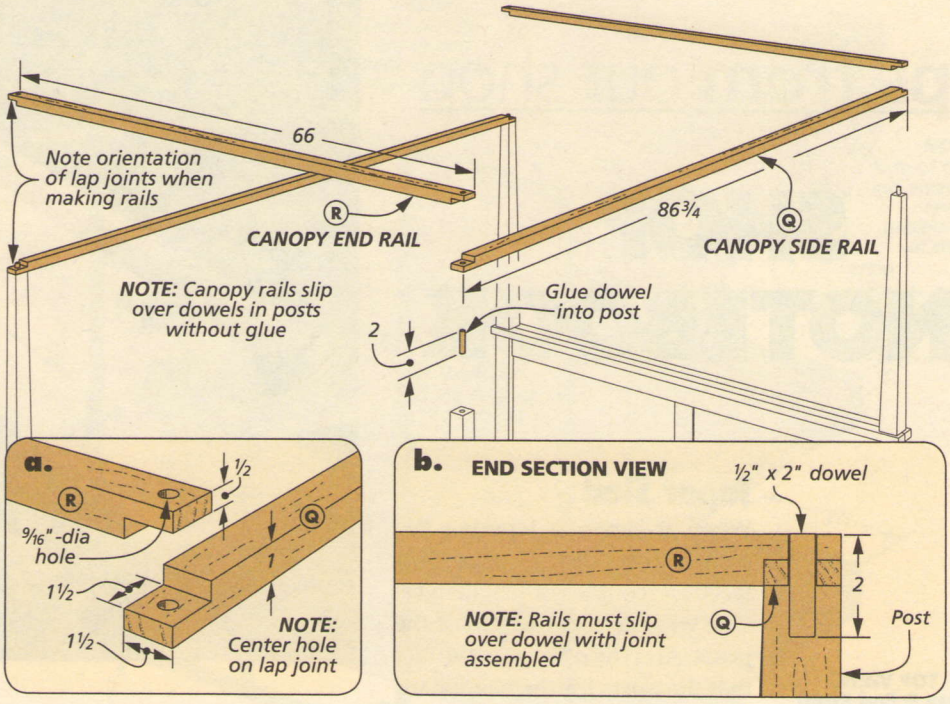

Some careful layout work is in order to locate the center of each hole. Once the holes are drilled you can place the rails in place.

ADD A FINISH. One of the best things about a knock-down bed is that it's easy to finish. I wiped on a couple coats of gel stain and followed up with a couple coats of lacquer. You can find out more in Sources on page 51.

Before nightfall, you can carry the pieces into the bedroom and assemble the bed. Add a decorative curtain and then lie down to relax on this heirloom piece. W

Materials, Supplies & Cutting Diagram

A	Inner Layers (4)	½ x 2½ - 79
B	Outer Layers (8)	1 x 2½ - 79
C	Headboard Upper Rail (1)	1 x 3 - 63
D	Headboard Lower Rail (1)	1 x 6 - 63
E	Headboard Center Stile (1)	1 x 3 - 15
F	Headboard Panels (2)	½ ply. - 15 x 30½
G	Headboard Stretcher (1)	1 x 6 - 63
H	Footboard Upper Rail (1)	1 x 3 - 63
I	Footboard Lower Rail (1)	1 x 4 - 63
J	Footboard Center Stile (1)	1 x 3 - 12
K	Footboard Panels (2)	½ ply. - 12 x 30½
L	Caps (4)	1 x 1¾ - 67
M	Bed Rails (2)	¾ x 8½ - 81¾
N	Bed Rail Caps (4)	¾ x 1½ - 81¾
O	Cleats (2)	¾ x 1 - 81¾
P	Slats (7)	¾ x 3½ - 62¾
Q	Canopy Side Rails (2)	1 x 1½ - 86¾
R	Canopy End Rails (2)	1 x 1½ - 66

- (1 Set) Surface-Mounted Bed Rail Brackets w/Screws
- (4) ½"-dia. x 2" Dowel
- (22) #8 x 1½" Fh Woodscrews

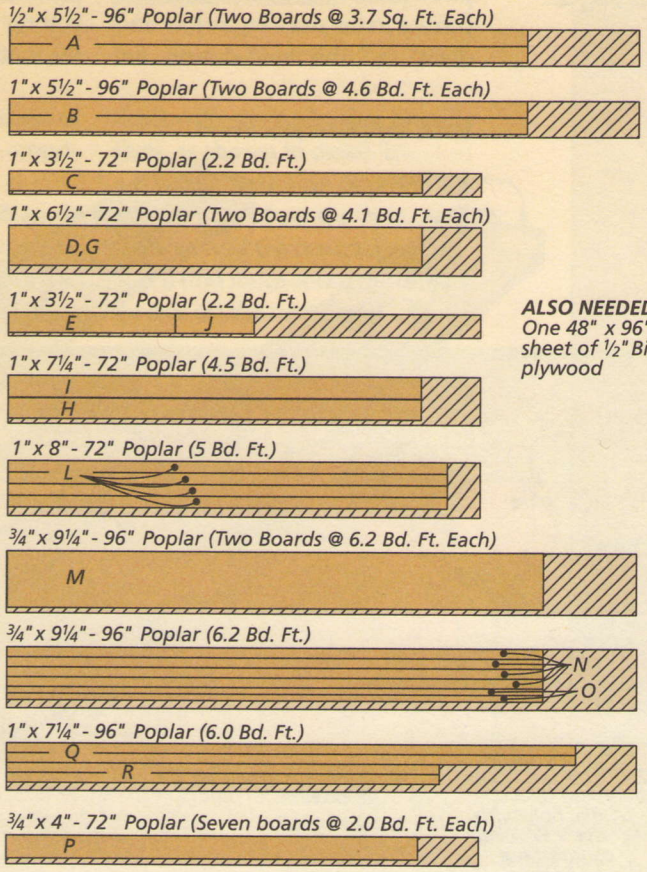

ALSO NEEDED: One 48" x 96" sheet of ½" Birch plywood

SHOP NOTEBOOK

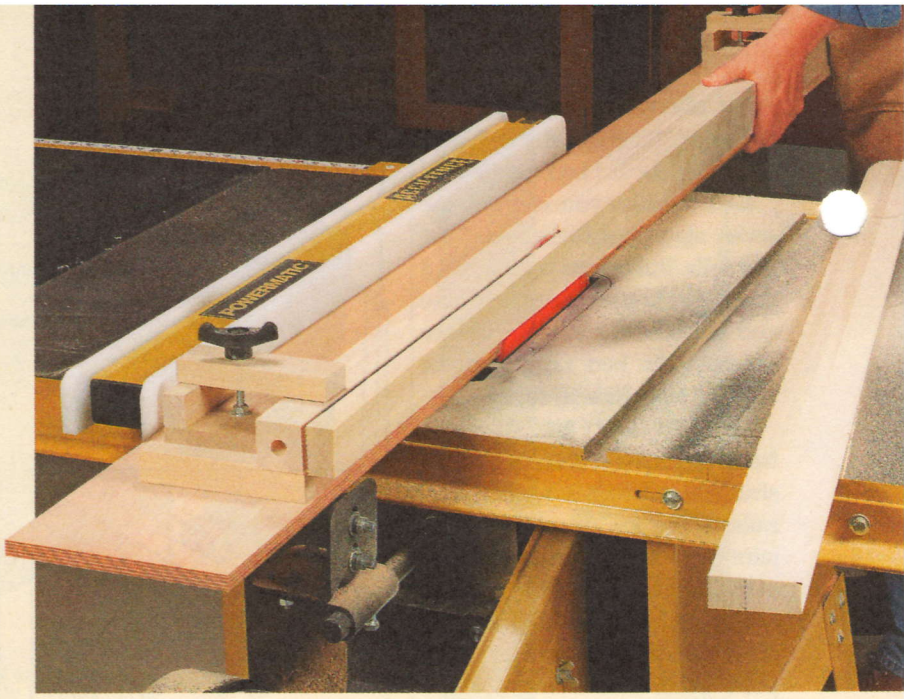

Taper Sled

When it came to tapering the posts for the bed on page 24, I faced a couple of challenges. One was the sheer length of the posts. And the other was the fact that the posts for the headboard and the footboard have different length tapers. To solve both of these issues, I made the taper sled you see in the photo at right and drawings below. The sled supports the entire length of the post and is adjustable for the two lengths of tapers.

BUILDING THE SLED. The sled consists of a ½" plywood base, an end stop, and a pair of hold-downs. As you can see in the drawing below and detail 'a,' the hold-downs are made up of a two-piece stop and a clamp block. They're attached to the base with a carriage bolt, hex nut, plastic wing knob, and a pair of washers.

If you take a look at the drawing in the margin at left, you'll notice that there are two holes in the base for attaching the rear hold-down. This is because the position of the hold-down changes in between cutting the headboard posts and the footboard posts.

To use the sled, position the rip fence so the edge of the base butts up against the saw blade. Then place the first leg in the sled and tighten down the hold-downs.

CUT THE TAPERS. To avoid bogging down the motor on my table saw, I cut each taper in two passes, raising the blade in between. After cutting the first taper, you'll need to add a block under the end of the leg to support it while cutting the second taper.

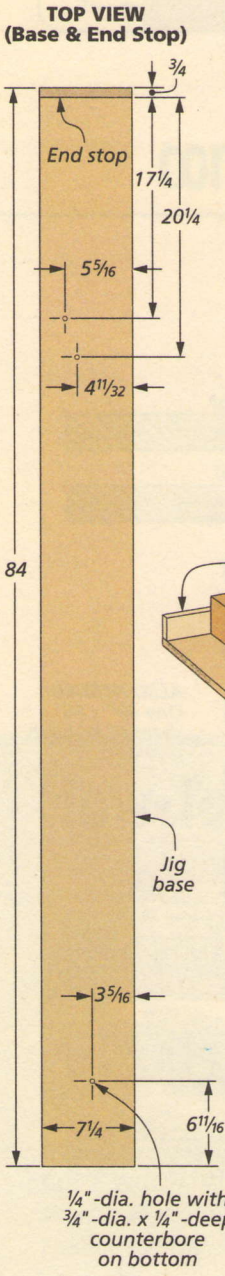

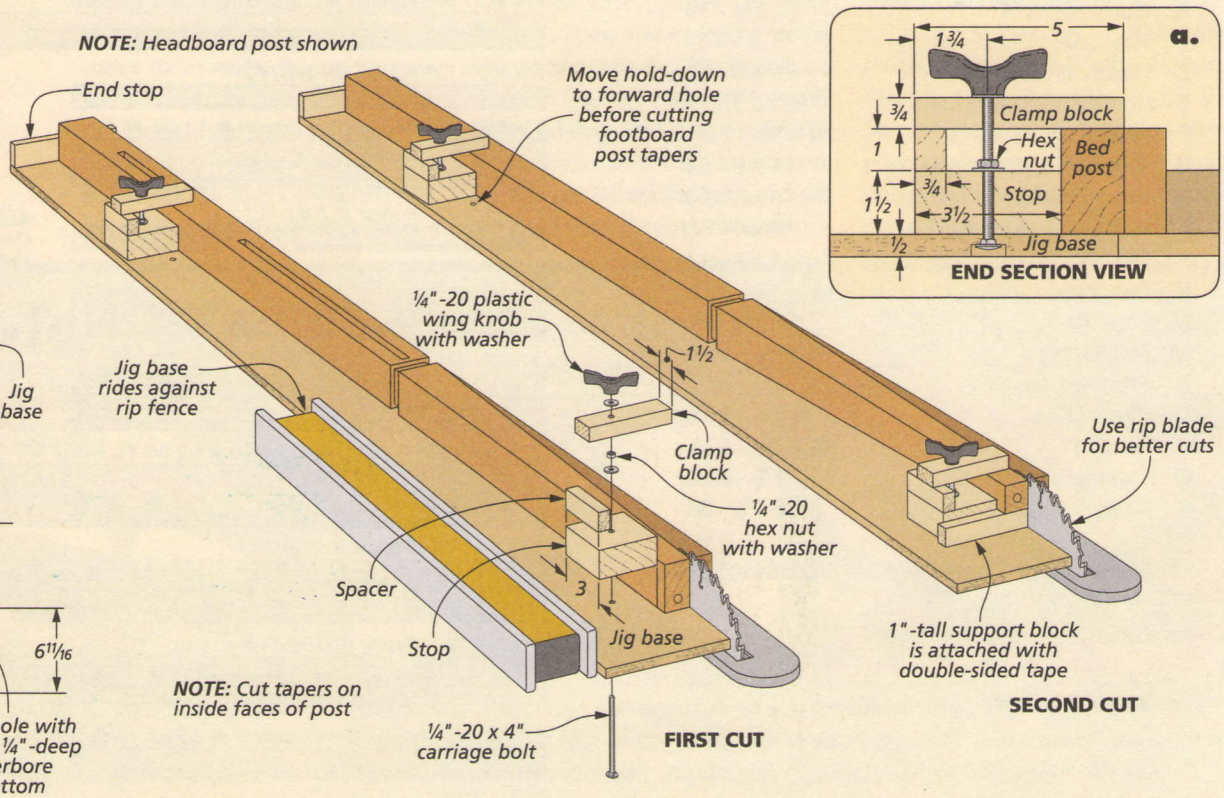

Beveled Feet

One of the distinctive features of the step-back cupboard on page 34 are the beveled feet. On the front of the cupboard, these feet are incorporated into the face frame stiles. But on the sides and back, they're made by cutting out a large notch in the ends of the sides and the back rail. I made these cutouts using a jig saw and a router.

CUT. To begin, you can cut out the bulk of the waste with a jig saw, as shown in Figure 1. The key here is to remain just shy of the layout line. I made the two end cuts first, followed by the longer cut across the width.

SMOOTH. To clean up the saw marks left by the jig saw, I used a router and a flush trim bit (Figure 2). Here, I clamped a board on the underside of the workpiece, along the layout line of the cutout. This gives the bearing of the flush trim bit something to ride against. You can use the same technique for the angled sides of the cutout. Lastly, you can square up the corners with a chisel.

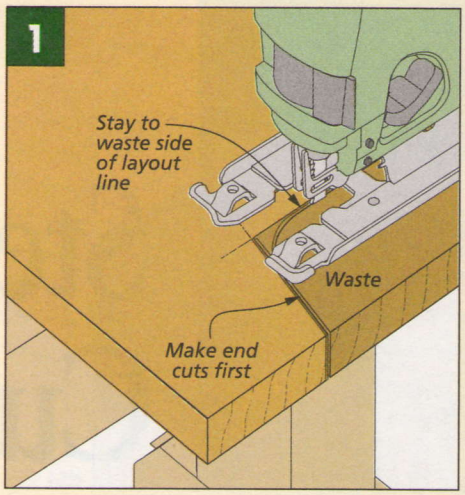

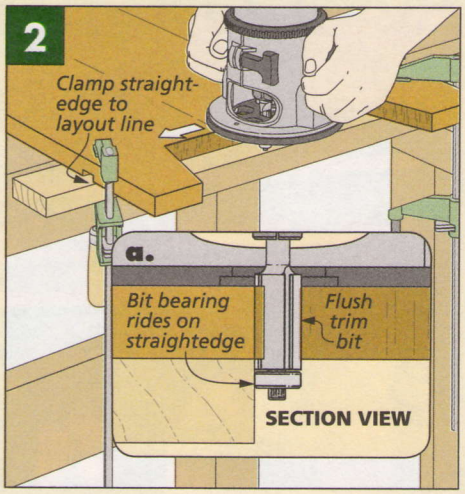

Cut Nail Technique

To add to the rustic look of the step-back cupboard, I used cut nails and brads. But the tapered shape of these nails can act like a wedge, sometimes splitting the wood. This is particularly the case when nailing near the end of a board (Figure 1).

To minimize splitting, I took a couple of precautions. First, I drilled a pilot hole for each nail. And second, I made sure to orient the nails so the heads run parallel with the grain (Figure 2).

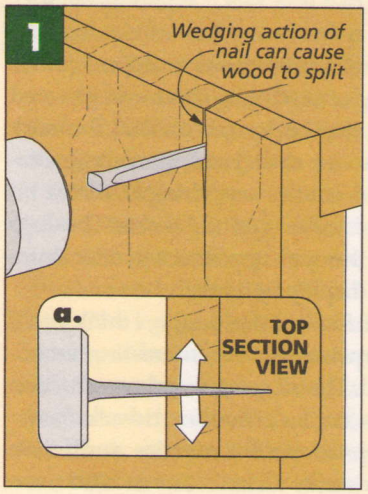

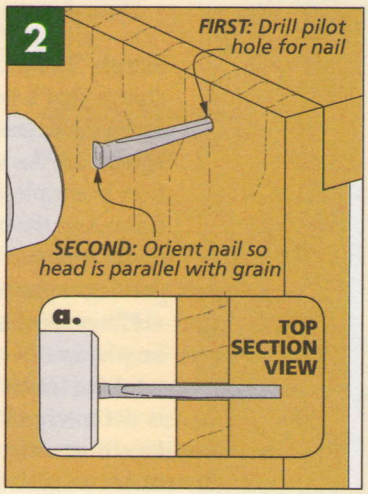

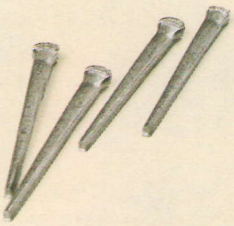

▲ Cut nails are tapered for better holding power.

Stopped Chamfers

The upper stiles of the step-back cupboard feature stopped chamfers. For the best appearance, you'll want to make sure that the chamfers start and stop at the same points on each stile.

To do this, I marked the ends of the chamfers on the stiles. (Note: The distance from the end of the chamfer to the end of the stile is different at the top and bottom. So you'll need to lay out right and left stiles.) Next, I marked the centerline of the chamfer bit on the fence of my router table.

To rout the chamfers, simply pivot the stile into the rotating bit so that the layout line on the workpiece lines up with the line on the fence (Figure 1). When you reach the end of the chamfer, pivot the workpiece away from the fence (Figure 2).

The router bit leaves the ends of the chamfers asymmetrical. So I sanded the chamfer ends to even them up (photo in margin).

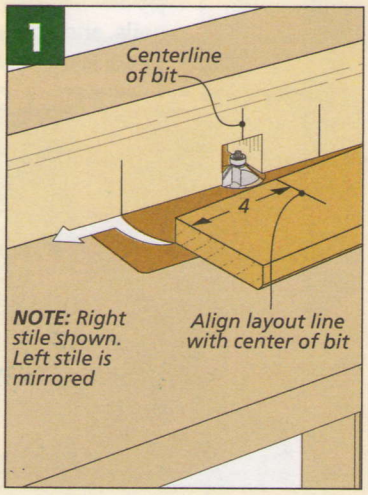

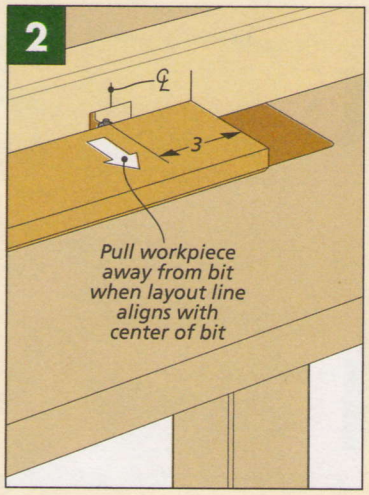

▲ A dowel wrapped with sandpaper can be used to smooth out the end of each chamfer.

rustic Step-Back Cupboard

The classic design of this practical project is matched by its traditional construction.

Simple "farmhouse" furniture has an unpretentious charm that's very attractive in these complicated times. This classic step-back cupboard hits the mark square on. As you can clearly see, the ornamentation is simple and subtle — nothing the least bit fussy. And the practicality is unmistakable. The deep lower section and the open upper section offer abundant storage and display options.

However, despite its humble design, I think you'll be pleasantly surprised by the interesting woodworking involved. The all solid-wood construction is definitely old-school. A beadboard back, "sawtooth" shelf supports, and a mortise and tenon raised panel door — it's all here. I even used inexpensive, knotty red alder lumber, exposed square nails, and an "aged" finish to add authenticity. My guess is that you'll be sorry to see this project end.

▲ A recessed shelf in the lower section of the cupboard creates versatile, two-tier storage for all sorts of household items.

CONSTRUCTION DETAILS

OVERALL DIMENSIONS: 19¼"D x 30⁵⁄₁₆"W x 76¾"H

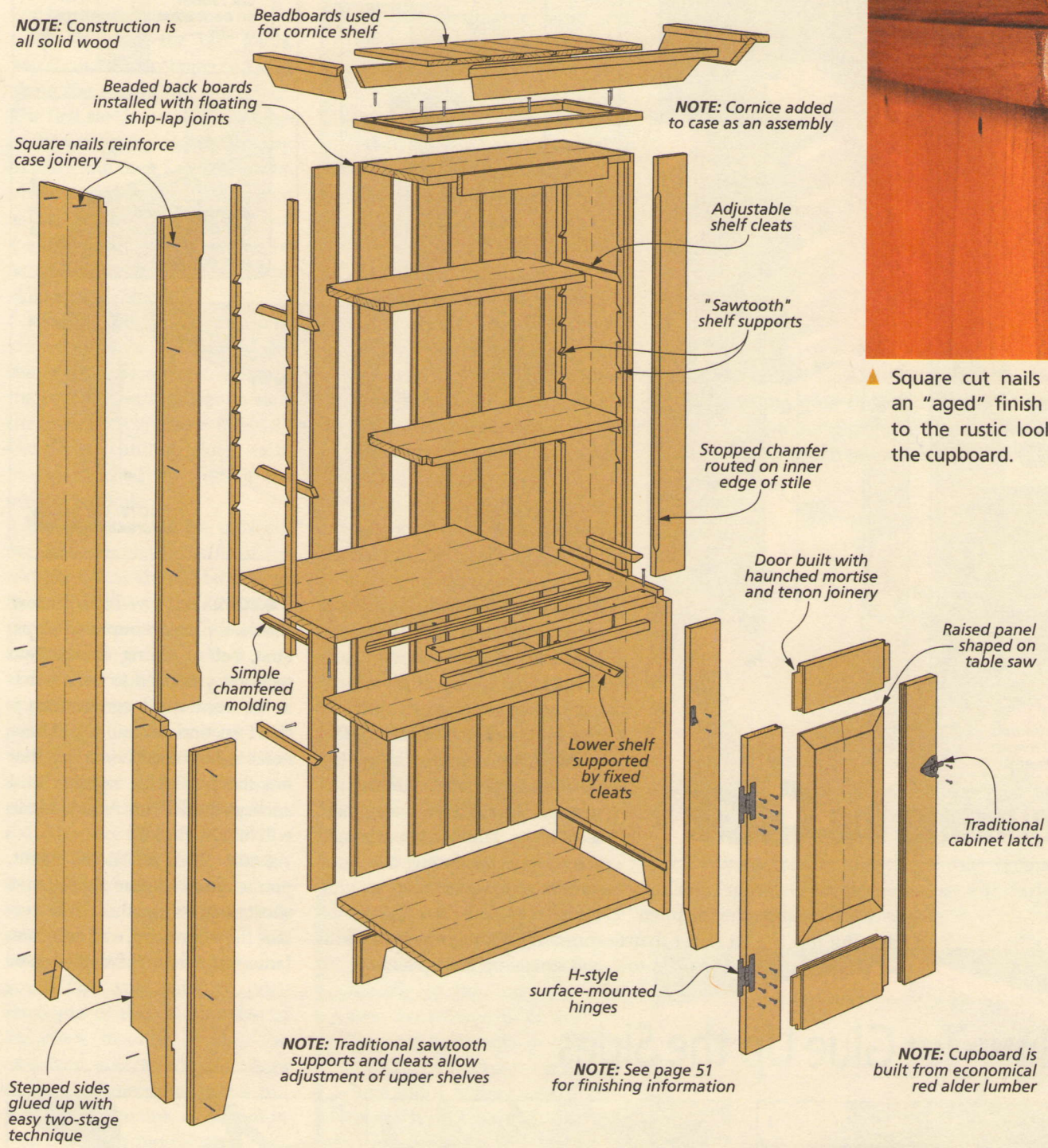

▲ Square cut nails and an "aged" finish add to the rustic look of the cupboard.

SIDE SECTION VIEW

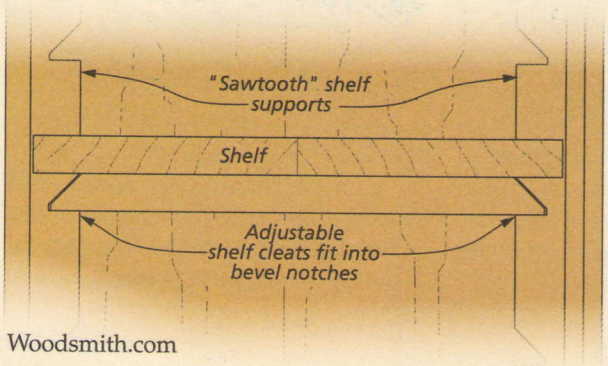

FRONT SECTION VIEW

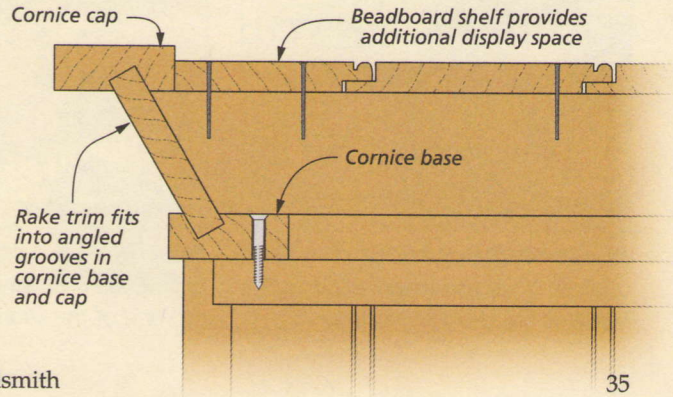

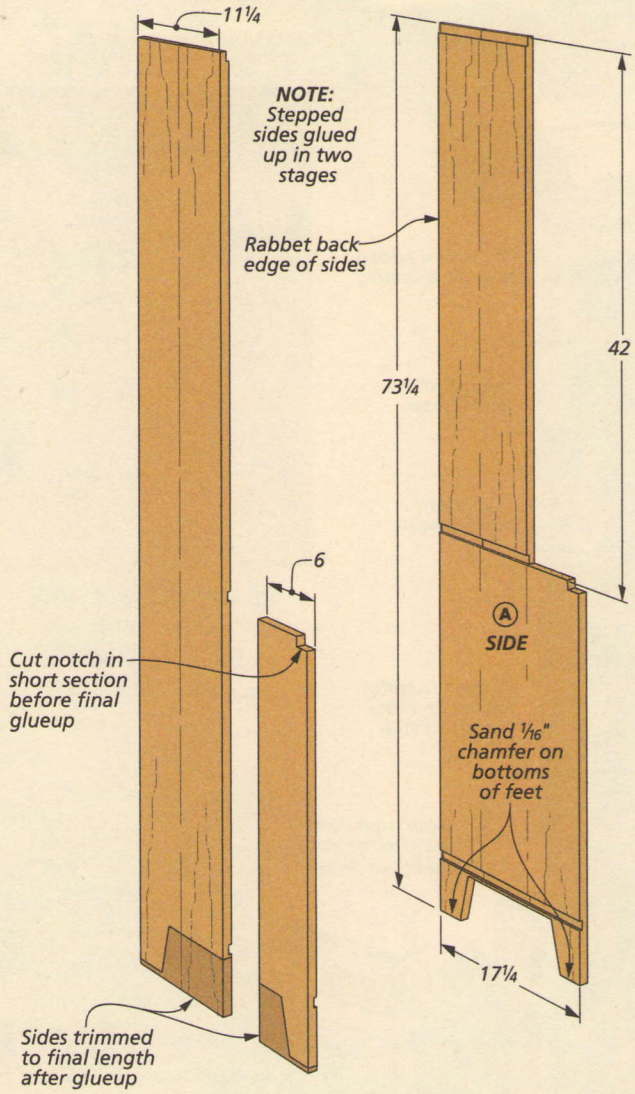

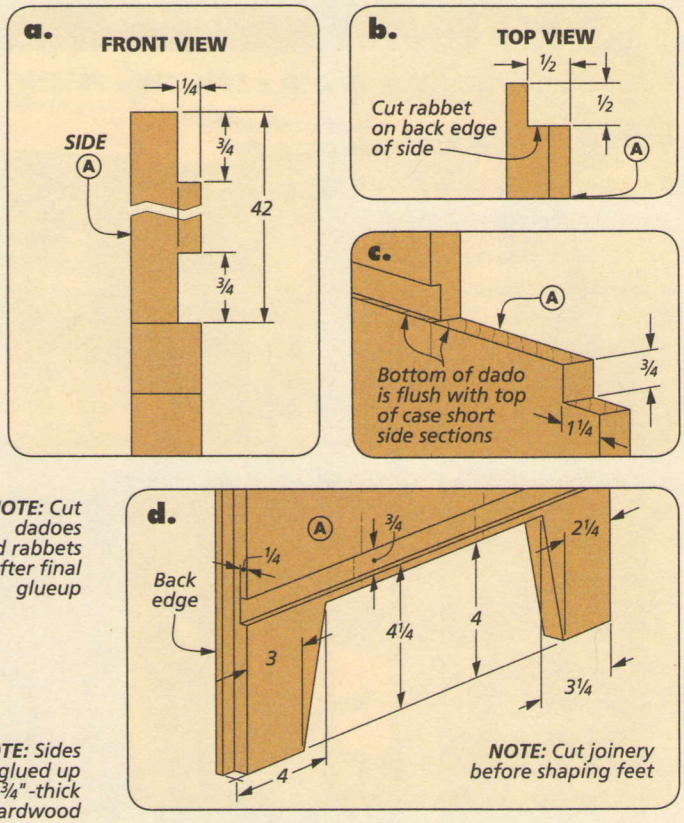

building the CASE

The only real challenge to building the case is creating the "stepped" sides. But this is a lot easier than you might think. The trick is to make extra-long tall and short sections for each side. Then after squaring up the top end of each side section, you just glue them together in the proper alignment and trim the side to final length.

TWO SECTIONS. I started by gluing up oversized panels for the tall sections. I cut the narrower short sections to width from a single board, but depending on your lumber, you may have to glue these up as well. Once the clamps come off, trim them to final width and square up the top ends.

NOTCHES. The How-To box below shows the next couple of steps. First, before gluing up the two sections, you need to cut a notch in the front upper corner of each short section (detail 'c'). These notches hold the divider rail that ties the two sides together and anchors the divider. A dado blade will handle the job.

GLUEUP. With the notches cut, you're ready to glue the tall and short sections together. To be certain the alignment was accurate, I measured down from the top of

How-To: Glue Up the Sides

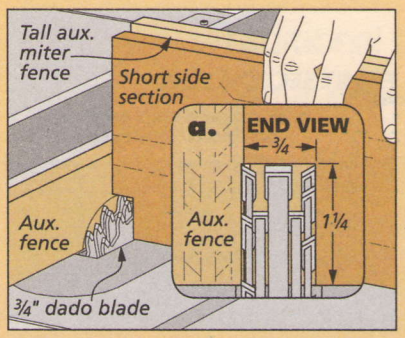

Divider Rail Notches. *Bury a dado blade in an auxiliary rip fence to cut a notch in the short sections.*

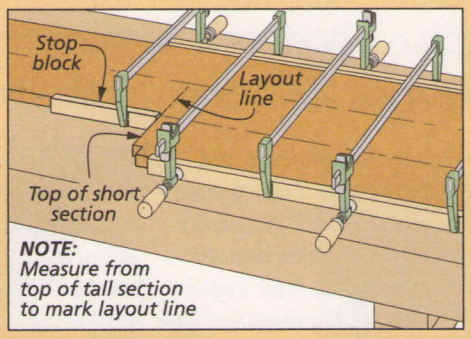

Final Glueup. *A stop block clamped to the tall section ensures proper alignment of the top end of the short section.*

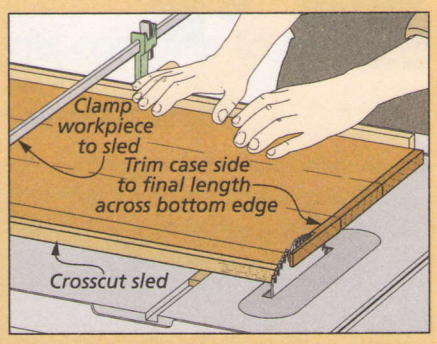

Finished Length. *With the two sections glued together, cut the side to length by trimming the bottom.*

each tall panel and then clamped a stop block at my mark. Then you can apply glue and clamps, making sure the short panel is snug to the stop block.

FINAL LENGTH. When the clamps are back in the rack, cut the sides to final length by trimming the bottoms. I used my crosscut sled on the table saw. A circular saw guided by a straightedge is another good option.

JOINERY. Cutting the joinery for the top, divider, and bottom comes next. The top fits into rabbets in the sides while the divider and bottom are held in dadoes. You'll also need to cut a rabbet along the back edge of each side to hold the back. A look at the How-To box below and the details on the opposite page will fill you in on the specifics.

FEET. The final step is to cut out the beveled feet (detail 'd,' opposite page). You'll note that the front foot is narrower than the back foot. Adding the face frame stiles will make up this difference. After laying out the profile, I removed the waste with a jig saw, and then smoothed the cuts with a router and straightedge. (For more on this, turn to page 33.)

THE PANELS. Now you can get to work on the top, divider, and bottom panels. The top and bottom are straightforward. I simply glued up oversized panels and then trimmed them to final size.

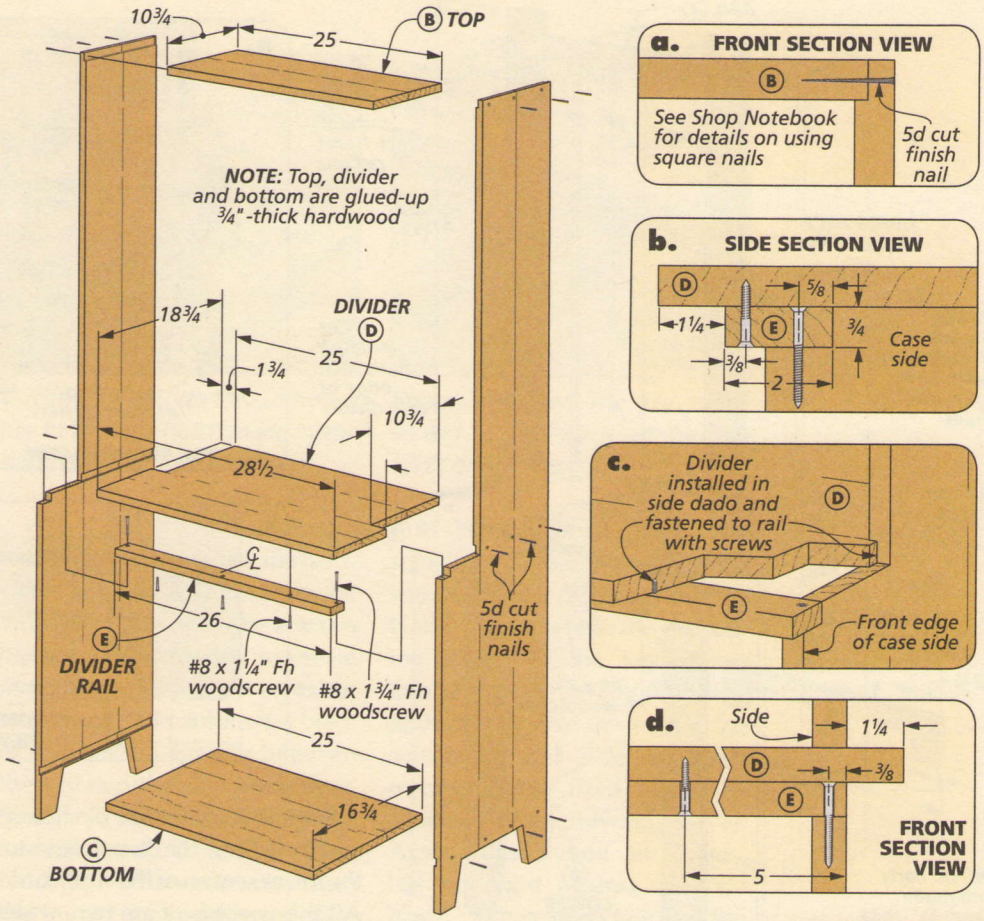

The divider is different. As you can see above, the front section overhangs both sides of the case. Like the sides, you can easily create the offsets by gluing up the panel from pre-sized sections.

ASSEMBLY. After cutting the divider rail to size and drilling holes for the screws, you can begin the assembly. To get started, I set one case side across sawhorses, spread glue in the top rabbet and bottom dado, and inserted those panels. The bottom is set flush to the front of the sides. After adding the second side, I clamped up the case before installing the divider rail. Finally, spread glue in the front portion of the middle dadoes and slide the divider into place.

I let the glue dry and then removed the clamps before driving the nails and installing the screws through the rail. You'll find a primer on using square nails in Shop Notebook (page 33).

▲ For details on cleaning up the jig saw cuts, turn to page 33.

Rabbets & Dadoes

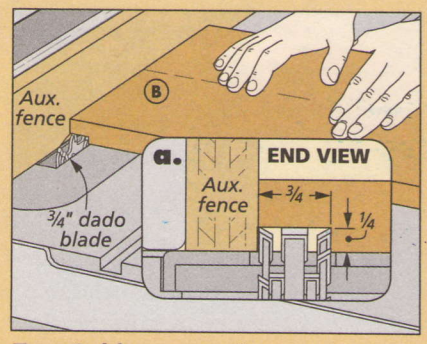

Top Rabbets. *You'll want to have extra support to the left of the saw when rabbeting the tops of the sides.*

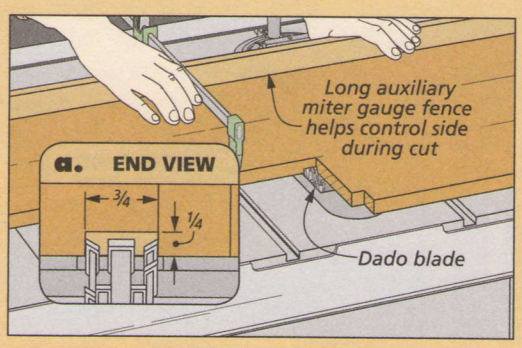

Divider Dadoes. *I clamped the side to a long auxiliary miter gauge fence when cutting the dadoes for the divider.*

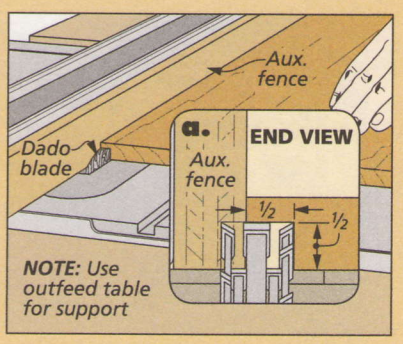

Back Rabbets. *Bury the dado blade in an auxiliary rip fence to cut the deep rabbets that hold the back boards.*

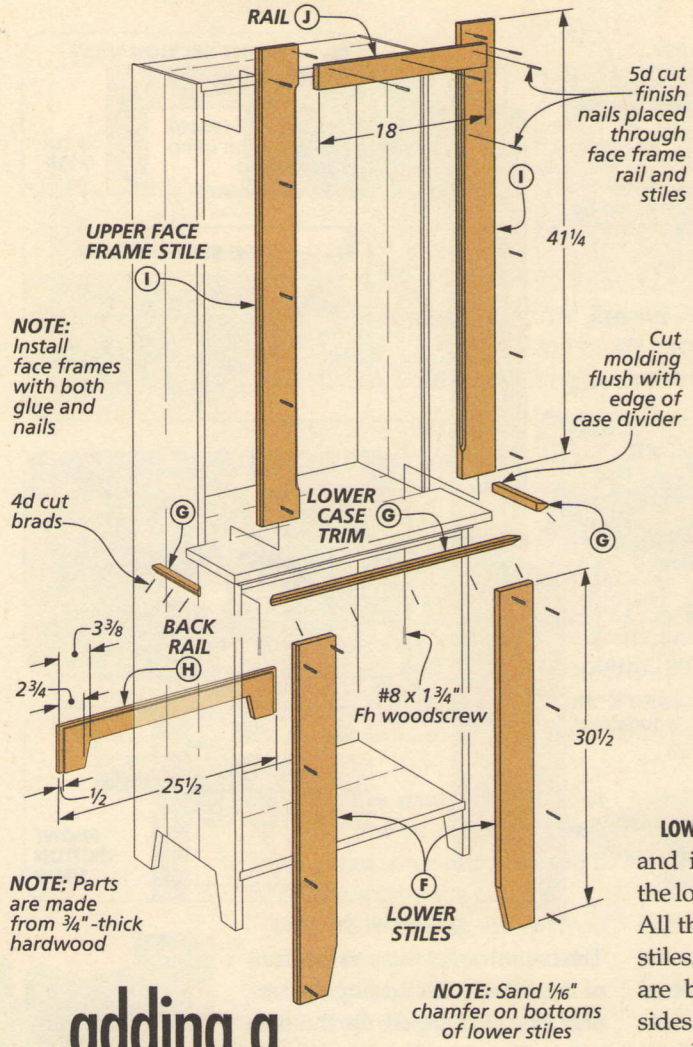

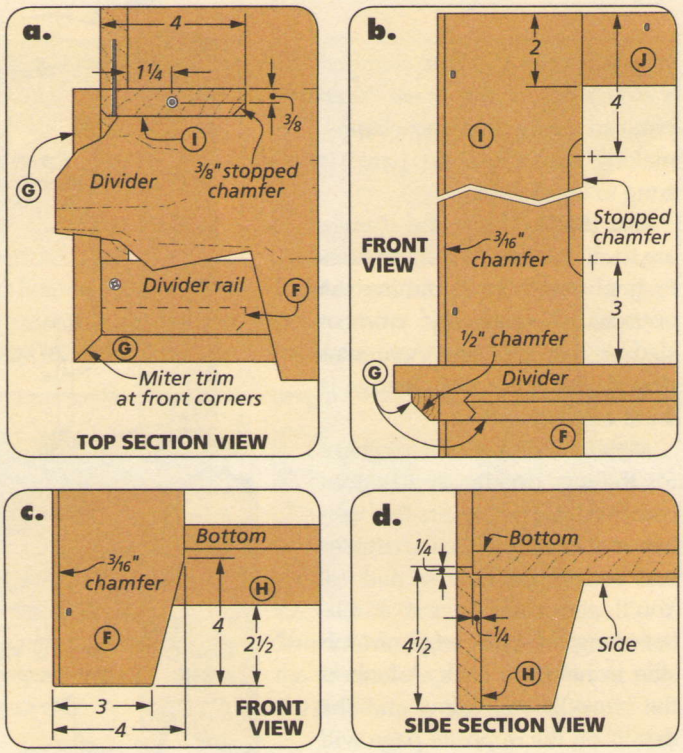

adding a FEW DETAILS

Now you can begin to add some of the important exterior and interior details. The face frames and a bit of molding come first, followed by the shelving.

LOWER STILES. I started by fitting and installing the face frame to the lower section of the cupboard. All this consists of are two, wide stiles. The lower ends of the stiles are beveled to match the case sides. And the outside edges are eased with a small chamfer at the router table (detail 'c').

With the stiles cut to size and all the details completed, you can glue them to the case. And again, I added square nails.

TRIM. To dress up the case and beef up the ends of the divider, I made some chamfered molding to install beneath the divider. The box below shows how to make the trim on the table saw. Then I mitered pieces to wrap the front and sides. The back ends of the side pieces are cut flush with the divider (details 'a' and 'b').

BACK RAIL. To finish up the lower section of the cupboard, I installed a rail across the back. The ends and top edge of this piece are rabbeted so that it will fit between the sides and lap over the bottom panel, as shown in the How-To box below. The rail is shaped to mirror the foot profile of the front and sides. Once ready, it can be glued in place.

How-To: Make the Molding & Back Rail

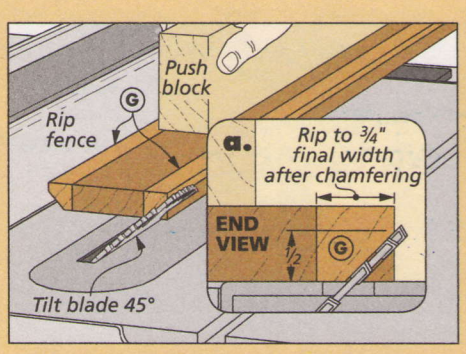

Chamfered Molding. *Cut a 45° chamfer on both edges of a wide blank, and then rip the finished molding free.*

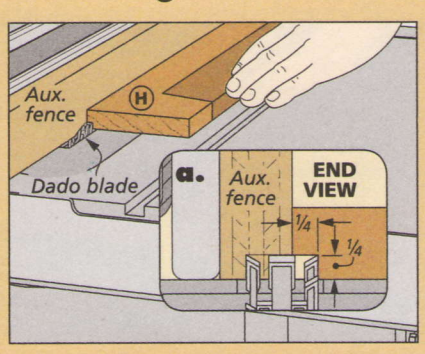

Top Edge. *I used a dado blade buried in an auxiliary rip fence to cut a rabbet along the top edge of the back rail.*

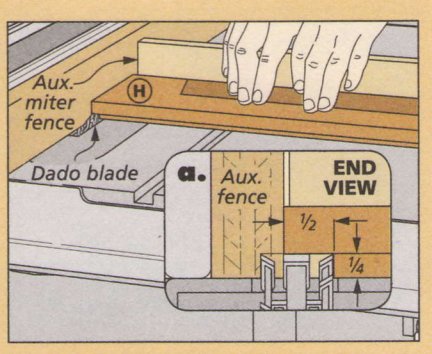

End Rabbets. *After adjusting the rip fence, use the miter gauge to rabbet the ends of the back rail.*

UPPER FACE FRAME. Now comes the upper face frame. It's made up of two, wide stiles and an upper rail. The stiles feature a narrow chamfer on the outer edge and a wider, stopped chamfer on the inner edge. There's no joinery to factor in. The upper rail is merely cut to fit between the stiles.

After cutting the stiles to width and length, you can take them to the router table for the chamfers. First, I routed the outer chamfers, then I reset the height of the bit for the stopped chamfers. Note that the chamfers stop 4" from the top but only 3" from the bottom. Marks on the stiles and fence will show you where to start and stop the cuts, as explained on page 33 of Shop Notebook.

When the stiles are completed, they can be glued and nailed to the case. In addition, I pinned the lower ends with screws installed through the divider. With both stiles in place, the upper rail can be added to the case.

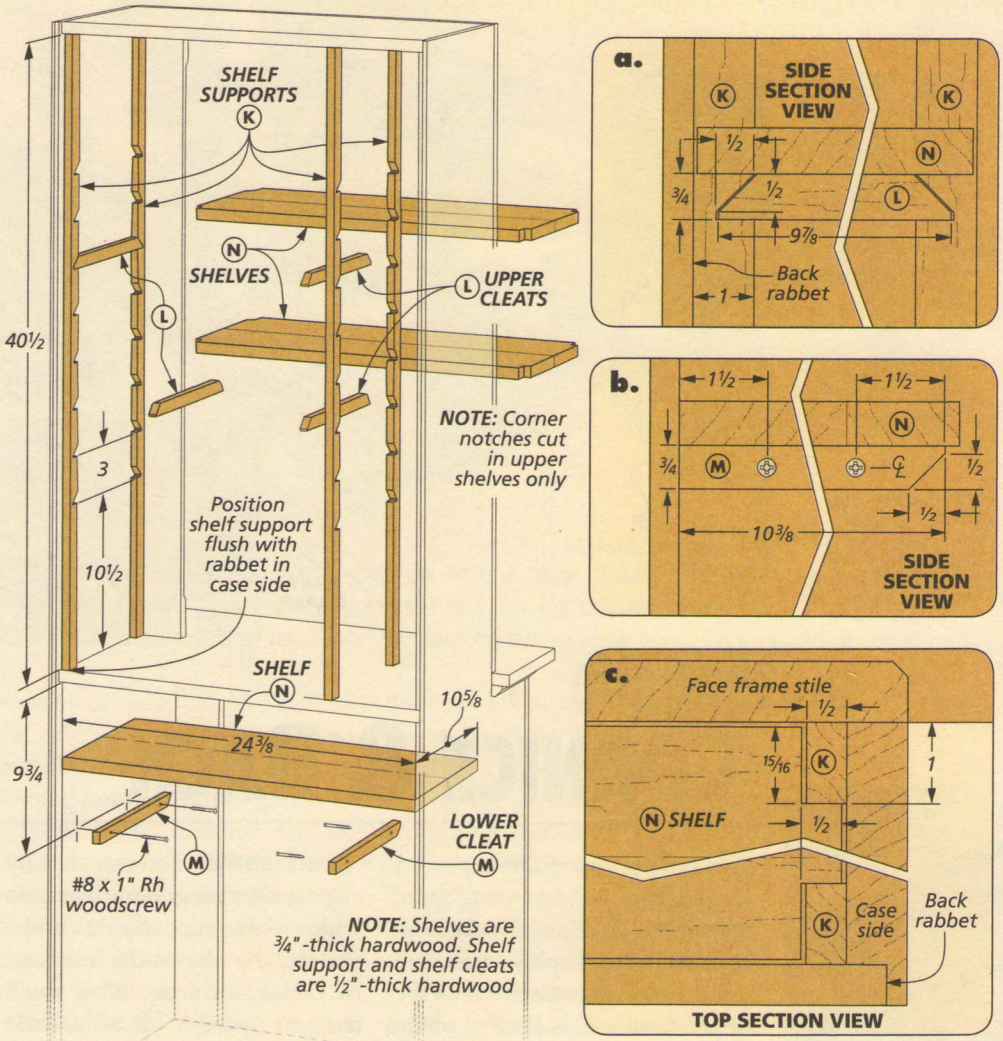

THE SHELVES

The upper section of the case holds two adjustable shelves while the lower section has one fixed shelf. The lower shelf is simply supported by a pair of cleats screwed to the case sides.

SAWTOOTH SUPPORTS. The traditional support system I used for the adjustable shelves is a little more interesting. These shelves are also supported by cleats. But here the cleats are installed between pairs of notched "sawtooth" supports (main drawing and detail 'a'). To adjust the height of a shelf, you simply use a different set of notches.

The box below shows how to make the supports. To ensure that the beveled notches were aligned, I ganged the strips with masking tape before making the cuts.

When the supports are completed, glue one into each corner of the case. The rear supports should be flush with the shoulders of the rabbets in the sides, as shown in detail 'a.'

CLEATS. Now you can make cleats to fit between the supports as well as a pair for the lower shelf. I cut the upper cleats to a length slightly less than the spread of the notches and then beveled both ends. You want an easy fit between the supports. The lower cleats are simply cut to size, beveled on one end, and then fastened with screws.

SHELVES. The three shelves are the same overall size. However, the two upper shelves need to be notched to fit around the supports. After cutting the shelves to size, a dado blade will handle the notches (detail 'c').

Sawtooth Shelf Supports

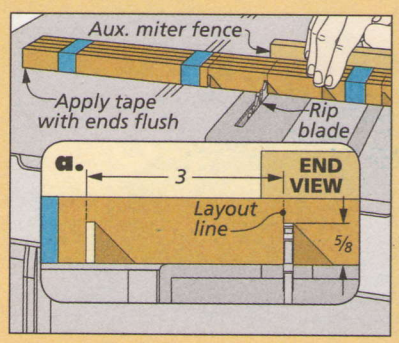

Square Cuts. *Lay out the notches, then use a rip blade to begin removing the waste with square cuts.*

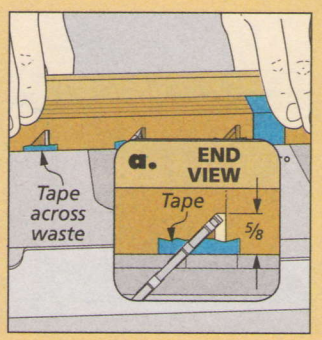

Bevel Cuts. *Masking tape will control the waste pieces during the bevel cuts.*

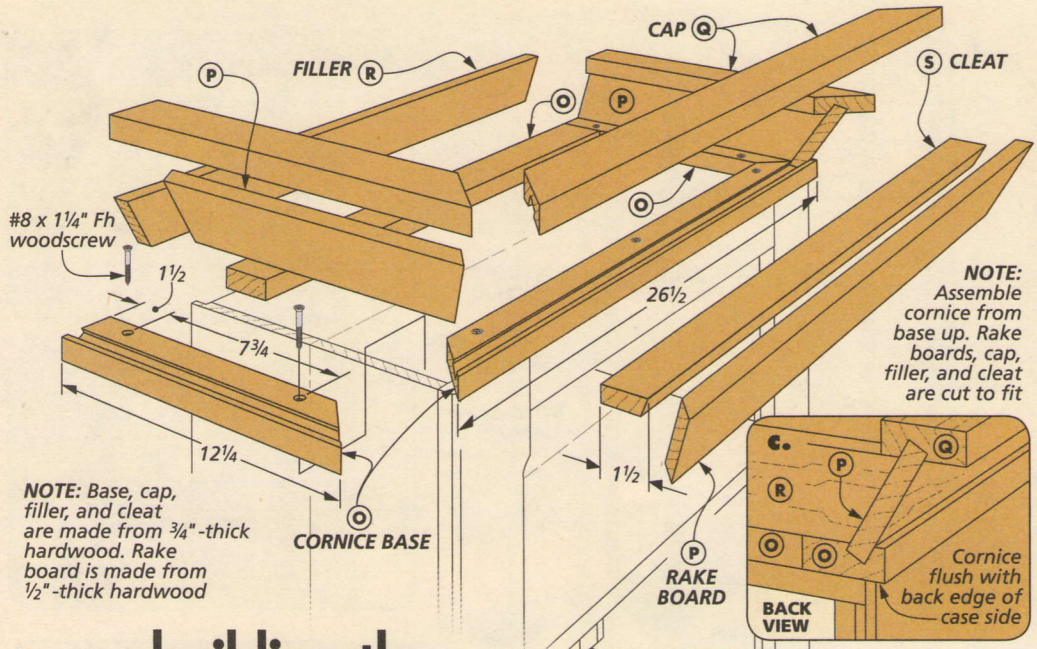

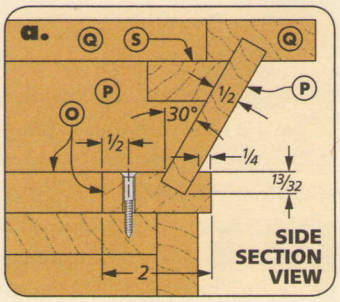

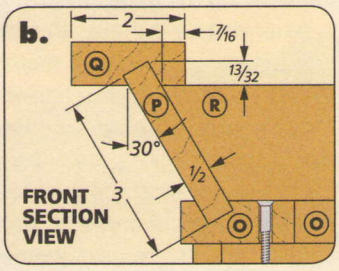

building the CORNICE & BACK

▲ The simple cornice feaures square edges and flat surfaces.

The cornice that tops the cupboard consists of a base and a cap frame that sandwich raking trim boards. To create a flat display surface on top, I installed a shelf across the upper frame. This shelf is made up of the same beadboards you'll fit to the cupboard back once the cornice is installed.

The construction of the cornice is a bit out of the ordinary. As you can see in details 'a' and 'b,' the rake trim fits into angled grooves in the frame pieces. This makes the whole assembly easier to build as well as very solid.

ANGLED GROOVES. You can start by cutting extra-long frame blanks to width — a front, two sides, and a back for the base, and a front and two sides for the cap. Now you'll need to install a ½"-wide dado blade in the table saw and tilt it to 30° to cut the angled grooves.

The box below shows how this goes. Note that the base pieces are cut with the outside edge against the rip fence while the cap pieces are cut with the inside edge against the fence. You'll need to adjust the rip fence setting between the two sets of cuts.

BASE FIRST. You're going to assemble the cornice from the bottom up starting with the base frame. As shown above, the front corners are mitered while the back rail is cut to fit between the side rails. Before gluing up the frame, I drilled the oversized countersunk screw holes to attach the cornice.

RAKE TRIM. The rake trim is next — a front piece and two sides. Due to the slant of the trim pieces, the corner joints are compound miters. The How-To box below shows an easy way to make these cuts on the table saw. I used an auxiliary fence on the miter gauge to support the pieces at 30°, then simply cut 45° miters.

I mitered one end of the front piece and one side piece from the left side of the blade, and then

How-To: Grooves & Compound Miters

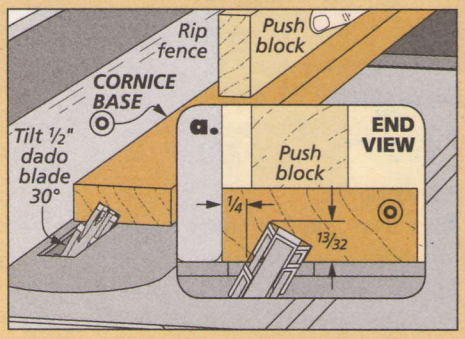

Base Grooves. *Use a test piece to adjust the fence and blade height. Then make the cuts with outside edges against the fence.*

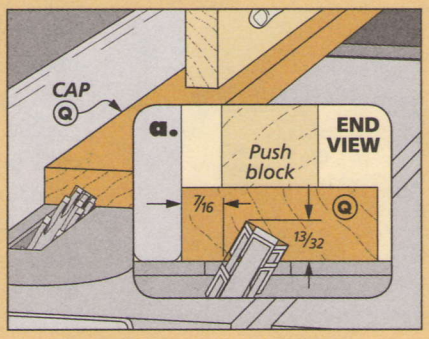

Cap Grooves. *After readjusting the fence, cut the cap grooves with the inside edges against the fence.*

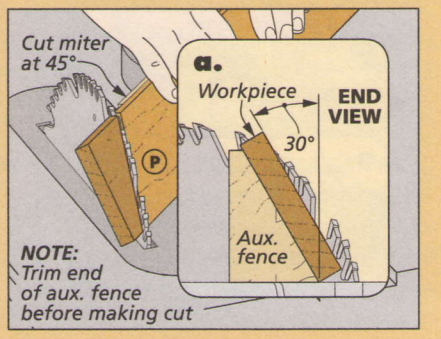

Compound Miters. *A beveled fence attached to the miter gauge makes a simple job of mitering the rake trim.*

switched to the right side to cut the mating miters. The back ends of the side pieces are cut square. Finally, I glued the pieces into the base using "hand" clamps to hold the joints while the glue set up.

THE CAP. Likewise, the cap pieces are cut and fit one at a time. I mitered the front piece to length first, then fit the two sides.

After gluing the cap pieces in place on the assembly, I installed the back filler and front cleat that support the shelf (details 'a' and 'c,' opposite). The ends of both pieces and the front edge of the cleat need to be beveled at 30°. Slide the cleat in from the back before installing the filler. And when all the pieces are in place, the cornice can be fastened to the cupboard with screws.

BACK & TOP SHELF

Your next task is to make and fit the beadboards that enclose the back and make up the cornice shelf. This authentic detail really adds a nice touch.

To allow for wood movement, the individual boards that form the back are joined together with floating ship-lap joints and fastened with nails (detail 'c'). The bead routed along one edge of each board disguises the joints as well as adds detail.

The How-To box at right shows how to make the beadboard at the router table and table saw. After routing a bead on each board, the ship-lap joints are created by cutting overlapping rabbets on opposite faces (detail 'c'). But take note that due to the presence of the bead on one edge, I cut the opposing rabbets to different depths.

With the ship-lap joints completed, you can cut the pieces to finished length for the back and the cornice. At this point, I went ahead and nailed down the shelf. It just takes is one nail at each end (except the end boards), as in details 'a' and 'c'). But since I intended to give the back an antiqued, milk paint finish, I held off on installing them.

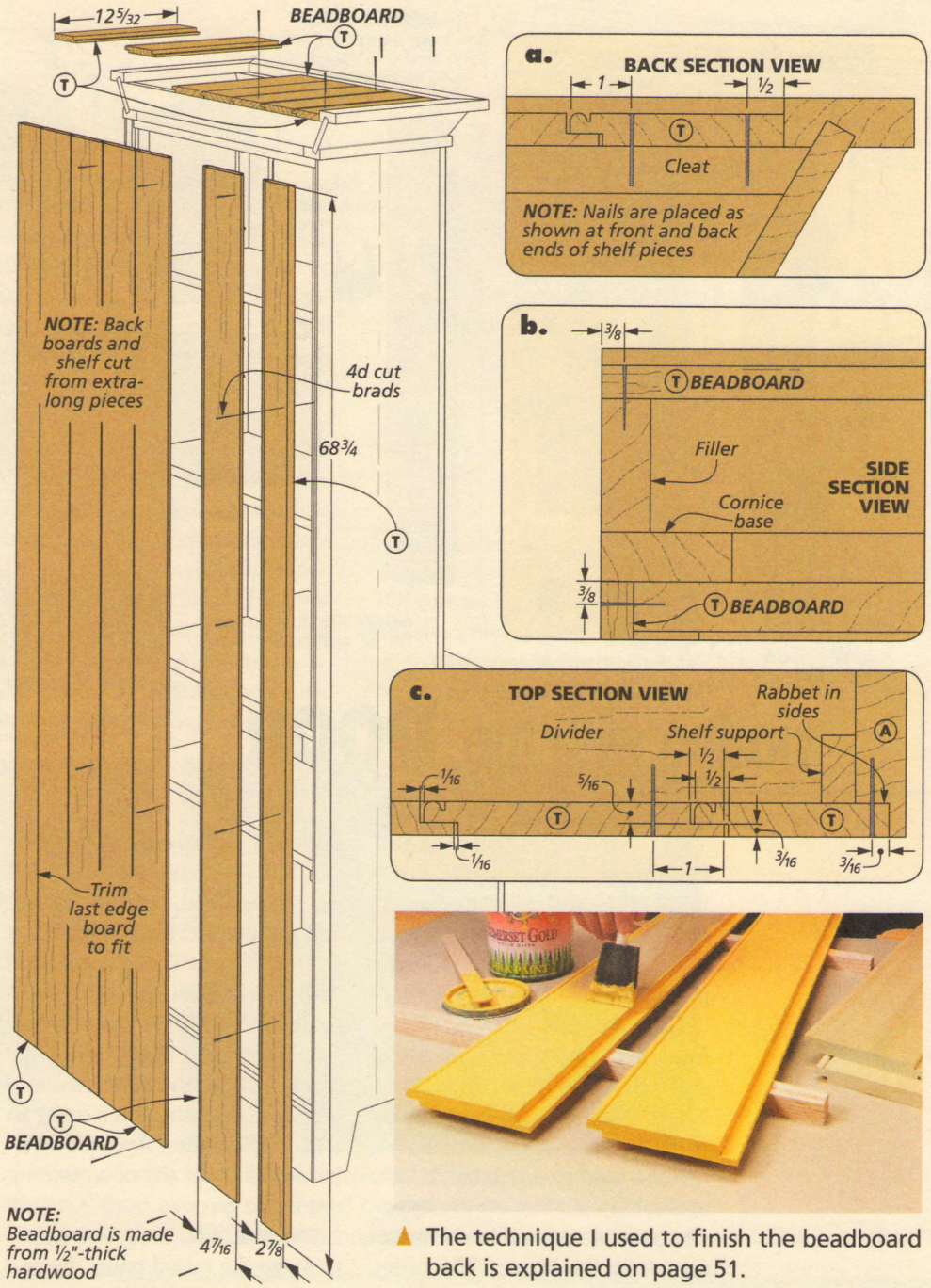

▲ The technique I used to finish the beadboard back is explained on page 51.

How-To: Beading

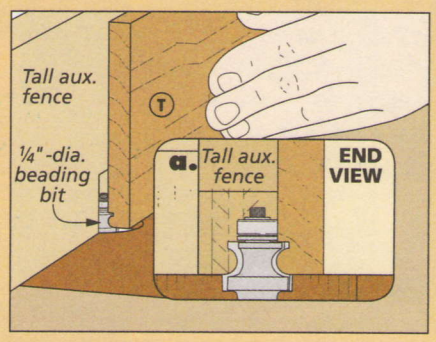

Edge Bead. *Use a tall fence to help steady the workpiece on edge as you pass it across a beading bit.*

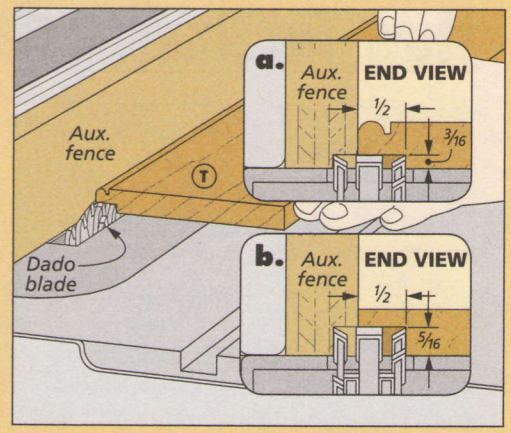

Two Rabbets. *I cut the shallower rabbet behind the bead first. Then I raised the blade to cut the deeper rabbet on the opposite face.*

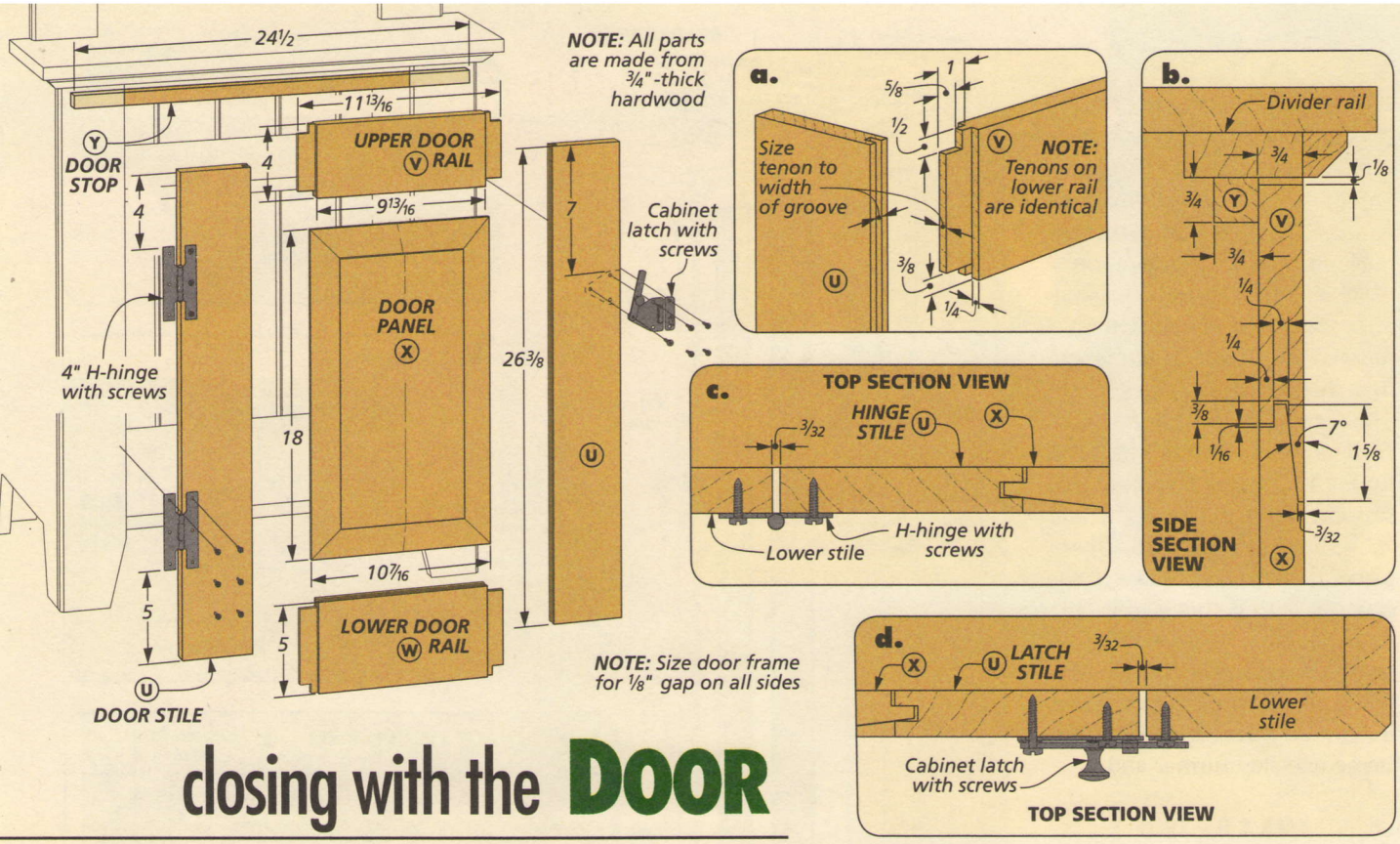

closing with the DOOR

Your final task is to build and install the raised-panel door. Wide stiles and rails, haunched mortise and tenon joinery, and a traditional panel profile make it a perfect complement.

THE FRAME. I began work on the frame by cutting the wide stiles and rails to a final width and length. Note that the lower rail is wider than the upper rail.

Now, you'll want to take a look at the How-To box on the opposite page and detail 'a' for guidance with the joinery. The order is pretty straightforward. First, you'll cut centered grooves in all the pieces. Next, you can lay out and cut the mortises in the stiles — drilling out the waste at the drill press, then squaring them up with chisels at the bench.

A wide dado blade will make quick work of the haunched tenons. Just sneak up on a snug fit with the mortises. And cut tenon haunches a hair shy of bottoming out in the grooves.

THE RAISED PANEL. Your next step is to make the raised panel. Here, I used a very traditional profile — a wide, shallow bevel leading up to a short shoulder (main drawing and detail 'b'). And then once the profile is completed, the ¾"-thick panel is fit to the grooves by cutting rabbets around the perimeter. This design makes sizing the panel to the grooves easier.

The drawings in the How-To box below illustrates the table saw technique used to shape the panel. I started with shallow shoulder cuts, then tilted the blade and used a tall fence to complete

How-To: Shaping the Raised Panel

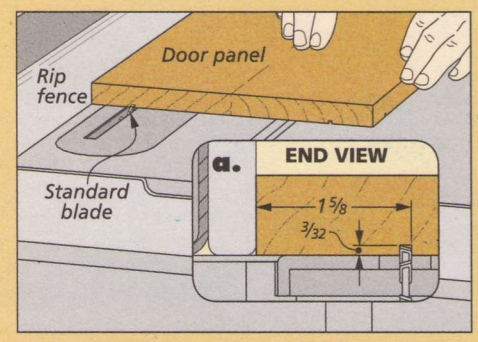

Shoulder Cuts. *Start the profile with a very shallow (3/32") shoulder cut around all four sides of the door panel.*

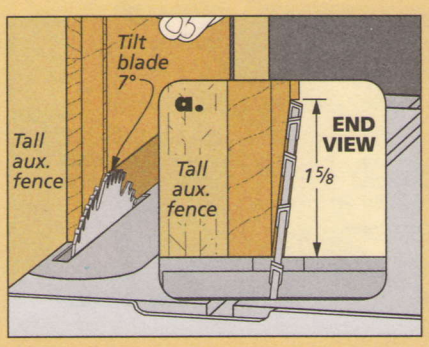

Bevel Cuts. *Hold the panel firmly against the fence when cutting the profile to full depth in several passes.*

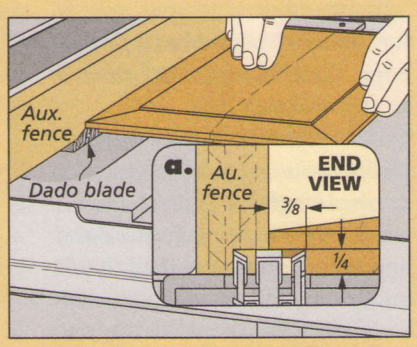

Rabbets. *Start with the blade set low. Test the fit to the grooves as you raise the blade height between passes.*

the profile. Set the blade height carefully and then cut the bevels to full depth with several passes.

RABBETS. Before cutting the rabbets, you'll want to clean up (sand or plane) the bevel cuts. I sized the width of the rabbets to create a 1/16" expansion gap all around (detail 'b,' opposite). Adjust the depth of the rabbets for a good fit to the frames.

When you're satisfied with the look and fit of the panel, go ahead and glue up the assembly. But don't glue the panel — let it float.

DETAILS. Before installing the door, I added a stop to the case (main drawing and detail 'b,' opposite). Finally, mount the reproduction hinges and latch.

Now you can take the rustic theme one step further and give the cupboard a slightly worn, glazed finish, as explained on page 51. It's almost like building a brand-new antique. W

How-To: Door Joinery

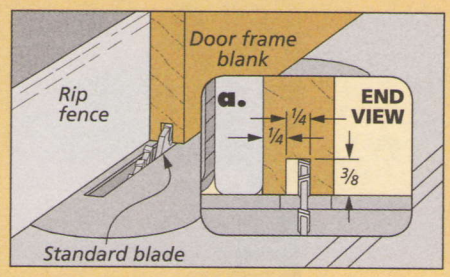

Centered Grooves. *Center the grooves in the stiles and rails by flipping the pieces end for end between passes.*

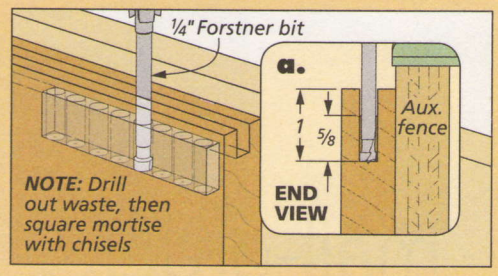

Drilling Mortises. *Drill overlapping holes to remove most of the waste from the mortise. Then square it up with chisels.*

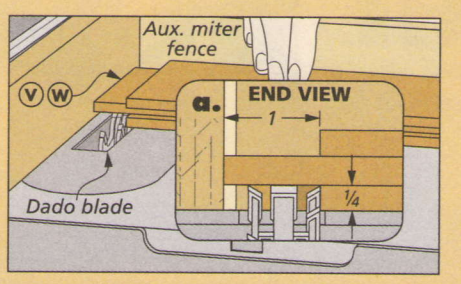

Tenon Cheeks. *Raise the blade between sets of passes to size the tenons for a hand-pressure fit to mortises.*

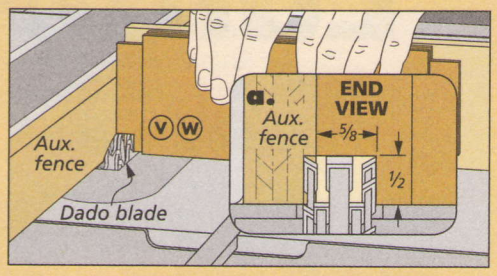

The Haunches. *To cut the haunches, use a tall auxiliary miter gauge fence to support the rails on edge.*

Materials, Supplies & Cutting Diagram

A	Sides (2)	3/4 x 17 1/4 - 73 1/4
B	Top (1)	3/4 x 10 3/4 - 25
C	Bottom (1)	3/4 x 16 3/4 - 25
D	Divider (1)	3/4 x 18 3/4 - 28 1/2
E	Divider Rail (1)	3/4 x 2 - 26
F	Lower Stiles (2)	3/4 x 4 - 30 1/2
G	Lower Case Trim (1)	3/4 x 3/4 - 48 rgh.
H	Back Base Rail (1)	3/4 x 4 1/2 - 25 1/2
I	Upper Stiles (2)	3/4 x 4 - 41 1/4
J	Upper Rail (1)	3/4 x 2 - 18
K	Shelf Supports (4)	1/2 x 1 - 40 1/2
L	Upper Shelf Cleats (4)	1/2 x 3/4 - 9 7/8
M	Lower Shelf Cleats (2)	1/2 x 3/4 - 10 3/8
N	Shelves (3)	3/4 x 10 5/8 - 24 3/8
O	Cornice Base (1)	3/4 x 2 - 80 rgh.
P	Rake Board (1)	1/2 x 3 - 58 rgh.
Q	Cap (1)	3/4 x 2 - 62 rgh.
R	Filler (1)	3/4 x 2 1/4 rgh. - 28 rgh.
S	Cleat (1)	3/4 x 1 1/2 - 28 rgh.
T	Beadboard (7)	1/2 x 4 7/16 - 82 rgh.
U	Door Stiles (2)	3/4 x 4 - 26 3/8
V	Upper Door Rail (1)	3/4 x 4 - 11 13/16
W	Lower Door Rail (1)	3/4 x 5 - 11 13/16
X	Door Panel (1)	3/4 x 10 7/16 - 18
Y	Door Stop (1)	3/4 x 3/4 - 24 1/2

- (1 pr.) 4" H-Hinges w/Screws
- (1) Cabinet Latch w/Screws
- (10) #8 x 1 1/4" Fh Woodscrews
- (4) #8 x 1 3/4" Fh Woodscrews
- (4) #8 x 1"Rh Woodscrews
- (1/4 lb.) 4d Headless Cut Brads
- (1/4 lb.) 5d Cut Finish Nails

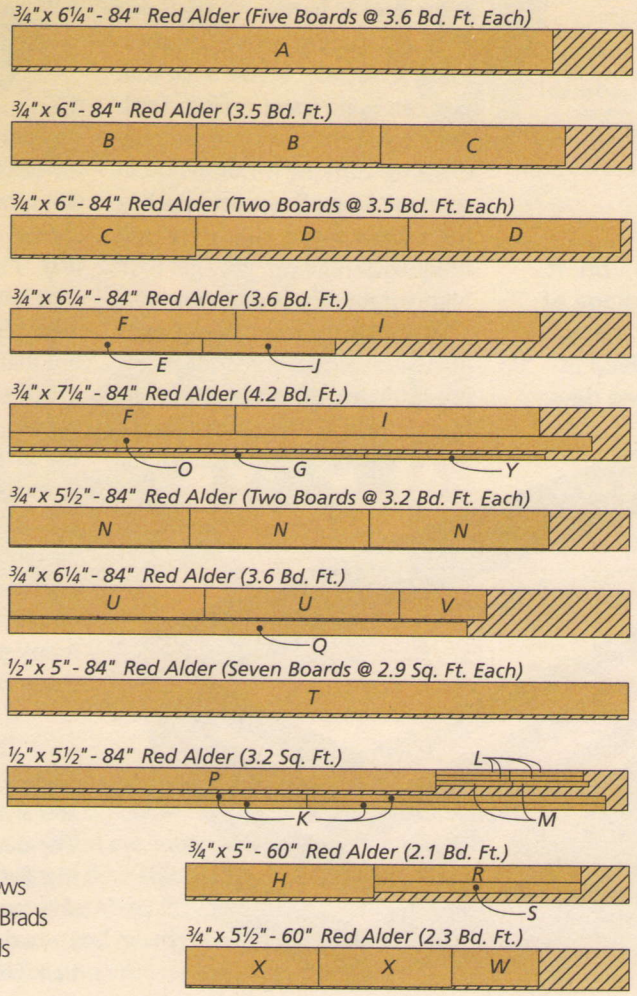

mail-order Lumber

Get high-quality lumber for your projects with the click of a mouse.

For some reason, many of us find it harder to shell out cash on quality wood than on tools. Common sense says that you can build great projects with a few basic tools, but you can only dress up run-of-the-mill wood in so many ways. Some projects beg for a little more character and uniqueness you can only get with highly figured wood or veneer.

WHERE TO BUY? The problem many of us face is locating sources for premium lumber and veneer. The big-box home centers are okay for a few basics like the occasional sheet of plywood, but their prices for lumber are off the chart and the quality is hit or miss. Your choice of species is pretty limited. Pine, oak, and poplar are standard fare. If you're lucky, you might find some maple or cherry, but that's about it.

Local lumberyards (where they still exist) have better quality, wider selection, and more knowledgeable staff to help you find what you need. Depending on where you live, you can rely on these local suppliers or a high-quality woodworking store. But in many places, you may not have ready access to these resources.

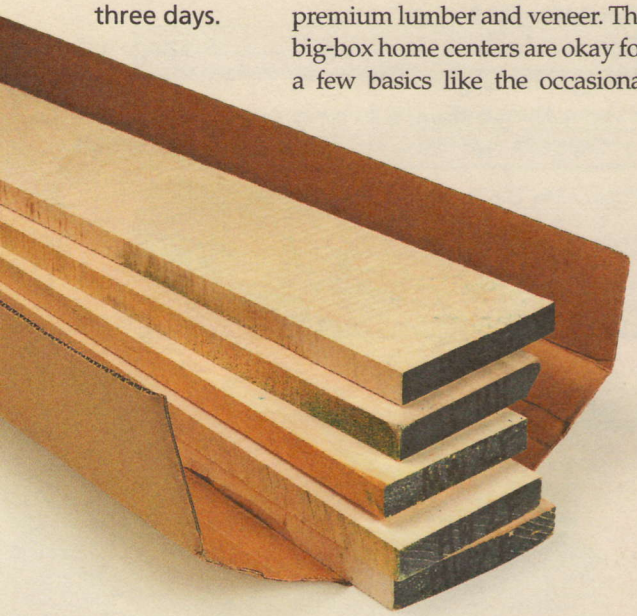

A 15-bd. ft. package of curly maple arrived in three days.

INTERNET LUMBERYARD

The good news is you can find just about anything you need online. There are a lot of suppliers looking for your business and they ship anywhere in the continental United States. And there are some benefits when you shop online.

UNLIMITED CHOICES. When you open up the market to online lumber vendors, you're not limited by the stock your local suppliers have on hand. Your choices in species and grain configurations become almost endless.

I look at it as having a team of buyers available to watch for unusual woods with beautiful grain patterns. Many vendors specialize in certain species, so you know they have a vested interest in offering you a wide selection.

SUPPORT THE LITTLE GUY. Remember those local lumberyards and mills? Many old, established mills have found that selling over the internet is a way to save the family business. They can offer high-quality wood to a much broader audience of potential buyers, no matter where they live.

WHERE TO START. If you use your favorite internet search engine and type in the phrase "online lumber," you'll end up with

dozens of potential vendors. But one resource I usually start with is *Woodfinder.com*. Their website serves as a portal for access to online lumber and veneer suppliers. You can narrow your search by locale, species, specialty woods, and many other parameters. It's worth checking out.

WHAT YOU SEE IS WHAT YOU GET. Most online vendors make sure you know exactly what you're getting. They'll have photos of each board or a representative sheet of veneer (see box below). And you'll know the exact measurements. The better vendors are also quick to answer any questions you may have.

DEALING WITH SHIPPING COSTS. The downside to ordering online is the cost of shipping. But there are ways to minimize its impact on your buying decision.

In some instances, the cost of the lumber is less than what you would pay locally. This can help balance the effect of the shipping cost on your pocketbook.

Another way to minimize shipping costs is to look for deals. Many vendors will have "bundle" deals with free shipping or give quantity discounts. It pays to subscribe to their email list or social networking page (like *Facebook*). This way, you're aware of any deals as they become available.

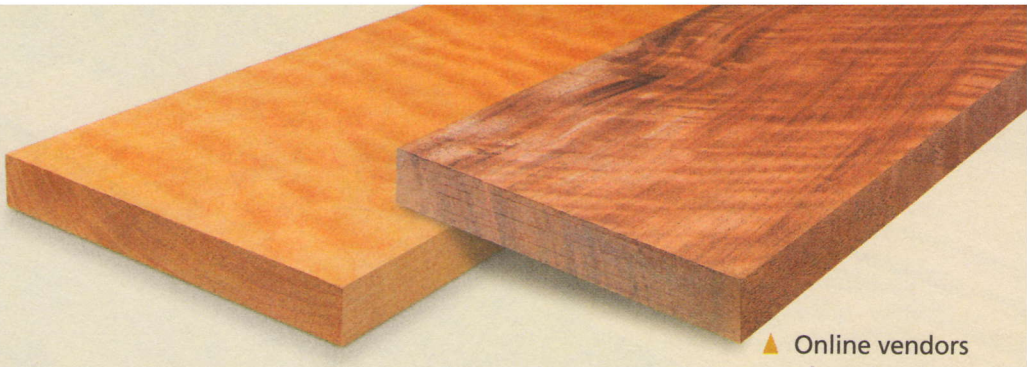

Online vendors give you access to specialty wood and veneer you may not be able to find locally.

If you have woodworking friends looking to buy lumber or veneer, consolidate your order to maximize the quantity discount and save on shipping costs.

WHAT YOU GET. After placing your order and typing in your credit card information, what can you expect? In just a few days, you'll receive a package on your doorstep. The photos on the opposite page show a few packages I received. Most vendors package the wood with heavy cardboard and plastic to make sure it arrives dry and undamaged.

As you can tell in the photos above, you can get some pretty special and unusual pieces you may not be able to find locally. (I should note that I applied mineral spirits to highlight the grain.)

START SMALL. If you're new to buying wood online or don't have first-hand knowledge about a vendor, start with a small order. This way, you'll get a feel for the quality of service and product they can offer. If all goes well, you can go on to place larger orders. And like I said before, most vendors are happy to address any concerns or questions you have.

OTHER GOOD SOURCES. Besides online storefronts, there are a couple of other options for finding special wood. Online auction sites (like *eBay*) allow you to bid on a product. Often, you can get a great deal. As a matter of fact, some of the online vendors also use *eBay* to sell bundles of wood, veneer, or an especially figured, one-of-a-kind piece.

For a local option, check out sites like *craigslist.org*. You can often find wood in your own neighborhood or city.

SPECIALTY WOOD. For many projects, I'm perfectly content with the lumber I find locally. But if you want to try exotic and figured woods, buying online is the way to go. It's a great way to shop for that special piece that will really make your project stand out from the crowd. All it takes is a few clicks of a mouse. W

Buying Wood on the Internet

Browsing the internet for that special piece of wood, veneer, and even pre-made parts can be a little overwhelming at first. Fortunately, most of the online vendors make it easy for you to choose just the right material for your project.

When it comes to finding a highly figured piece of wood for a project, I start with *woodfinder.com*, as I mentioned above. Another good resource is *Ebay*. For a wide selection of veneer, one of my favorite resources is *Certainly Wood*. You can find them online at *certainlywood.com*.

For large projects like tables, it often makes sense to purchase premade parts like table legs. I like to use parts from *Classic Designs by Matthew Burak*. They're located online at *tablelegs.com*.

working with Milk Paint

This centuries-old favorite is just the ticket for lending an authentic look to distressed pieces and reproduction furniture.

Choosing the right finish for a project is just as important as any of the joinery and molding details. And for furniture that's done in a rustic or antique style, I'll often use milk paint. It has a dull, flat sheen that looks great on traditional styles of furniture.

WHAT IS MILK PAINT? Milk paint is so named because milk was added to lime, chalk, and natural pigments to create the liquid paint. The protein casein in milk makes an excellent binder for the other ingredients. The result is a tough, long-lasting paint.

▼ Powdered milk paint contains casein, just like the original version.

POWDERED PAINT. Fortunately, you no longer need to milk a cow or head to the dairy aisle of your grocery store to try milk paint. You can buy authentic, casein-based milk paint in a convenient powdered form, like that shown at left. All you have to do is mix the powder with water before using it (see photos directly above.)

▲ With the powder measured into the jar, add an equal volume of water and stir.

▲ Even after vigorous stirring, it's still a good idea to strain the mixture to avoid lumps.

Powdered milk paint is available in twenty different traditional colors. (See page 51 for sources.) Best of all, milk paint is non-toxic, has very little odor, and dries so quickly you can apply a second coat in an hour. One thing to keep in mind, however, is that it's

▲ For an authentic, antique or distressed look, apply a thin coat of the first color.

▲ Next, sand some surfaces and the edges to bare wood and apply the second color.

▲ Finally, sand again after the second coat has dried to get the aged look you desire. Finish up with a glaze to add a dark layer.

best to mix only as much paint as you need. Because of the organic nature of milk paint, it will start to thicken and turn bad after a few days. (If you need milk paint with a longer shelf life, take a look at the box below.)

TECHNIQUES

What really makes milk paint stand out though is not how it's made, but how it's used. Milk paint lends itself to a number of different techniques that are great for creating custom effects or making a new project look old.

WASH COAT. For starters, you can a create a softer, faded look by using a "wash coat" of milk paint. Simply use more water when mixing up the paint to create a weaker color. The thinned-down paint acts more like a stain, allowing some of the character of the wood to show through the finish, such as you would find on a weathered piece.

BLENDING. You can also blend milk paint colors by combining the powders before adding the water. For example, adding white milk paint to any of the other colors will lighten the shade. This gives you a much wider range of tints.

LAYERING. One of the more interesting techniques that can be done with milk paint is to create a worn, distressed look with multiple layers and colors of paint. The photos at the top of the page give you an idea of how this is done.

The technique consists of layering two or more different colors of milk paint and sanding through some in a few areas. A glaze can also be used to give the wood an aged appearance. While the process is pretty straightfoward, it requires a little practice to achieve the right look. Essentially, you're trying to simulate the wear and tear that a piece of furniture might receive from being used and repainted over the years.

CRACKLE FINISH. One of my favorite milk paint effects is a crackle finish. As you can see in the photo at right, the top layer of paint is cracked, revealing a different color of paint beneath.

To create this effect, you apply a crackling agent between the first and second coats of paint. Within minutes of brushing on the second coat of paint, it begins to crackle. The effect is quite dramatic.

TOPCOAT. Although milk paint adheres very well, water or other liquids will leave stains on the dried paint. So it's a good idea to apply a clear finish over the paint, such as lacquer, polyurethane, or shellac. (Just avoid water-based finishes.)

Milk paint is a great finish for a wide range of projects. Once you give it a try, you'll be hooked. W

▼ A crackle finish is easy to apply and provides a unique look.

From the Can: Ready-to-Use Milk Paint

If you like the look of milk paint but don't enjoy mixing up a fresh batch for every project, you may want to consider *General Finishes'* line of milk paints. These paints come ready to use right out of the can. And unlike the powdered milk paints, they have a much longer shelf life.

In reality, these aren't true milk paints. (They aren't made from milk protein.) Instead, they're water-based latex paints that simulate the look and color of traditional milk paints. You can still use them to create a lot of the same effects shown above, which is why they were chosen for the beadboard on the step-back cupboard on page 34.

Like powdered milk paints, *General Finishes'* paints are available in a wide range of comparable colors. (See page 51 for sources.)

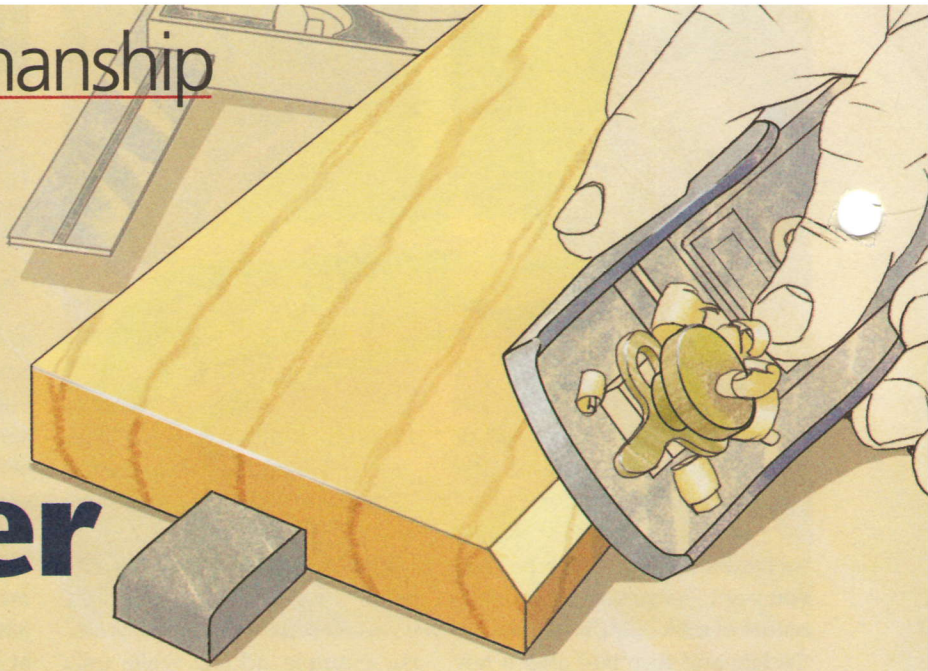

the versatile Chamfer

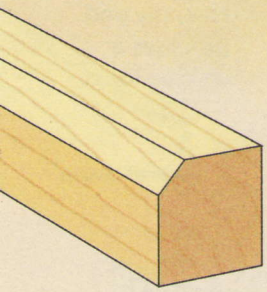

This simple profile looks great and both enhances the design and limits damage to your projects.

Molding profiles are often pretty style specific. For example, you wouldn't shape a fancy ogee profile on the edge of Shaker tabletop. However, there is one profile that works on virtually any period or style of furniture — the simple chamfer. No other profile offers as many design uses and possibilities. The trick is knowing how to incorporate chamfers into a design for the best practical function and aesthetic result.

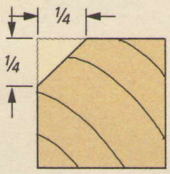

▲ Chamfers are typically dimensioned from the edge of the workpiece.

WHAT'S A CHAMFER? Let's start with the basics. A chamfer is essentially a bevel cut along an edge or across a corner, as shown in the drawing in the left margin. Although a chamfer doesn't have to be cut at 45° to the adjacent surfaces, this is the most common angle. A flat profile cut at a shallower angle is often simply referred to as a bevel. But there's no rigid distinction between the two terms.

A chamfer is usually dimensioned along the relieved edges, not across the face. As shown in the drawing at left, a ¼" chamfer is formed by cutting back ¼" along each edge.

The simple profile of a chamfer is one reason why it's so versatile — it's very easy to shape. A chamfer can be made with a variety of hand tools (block plane or spokeshave), it can be routed, or cut on the table saw.

STOPPED OR FULL. Not all chamfers are the same. The drawings below show variations in the way a chamfer can be worked on an edge or edges. A full chamfer runs the entire length of an edge. It either ends free or butted up to a flat surface, as shown below. This type is often a good choice on outside edges.

However, full chamfers can also be shaped on the inside edges of a frame. As you see in the upper left example, the intersecting chamfers are joined with a mason's miter to form a sharp, square transition.

A chamfer can also stop short of one or both ends of the piece, in which case it's called a stopped chamfer. Stopped chamfers are often shaped on the inside edges of frames. And they're used on the outside corners of a case where a continuous chamfer might interfere with other intersecting moldings.

Another reason to use stopped chamfers is the design possibilities. The transition from the square edge to the chamfer can create a focal point for embellishment.

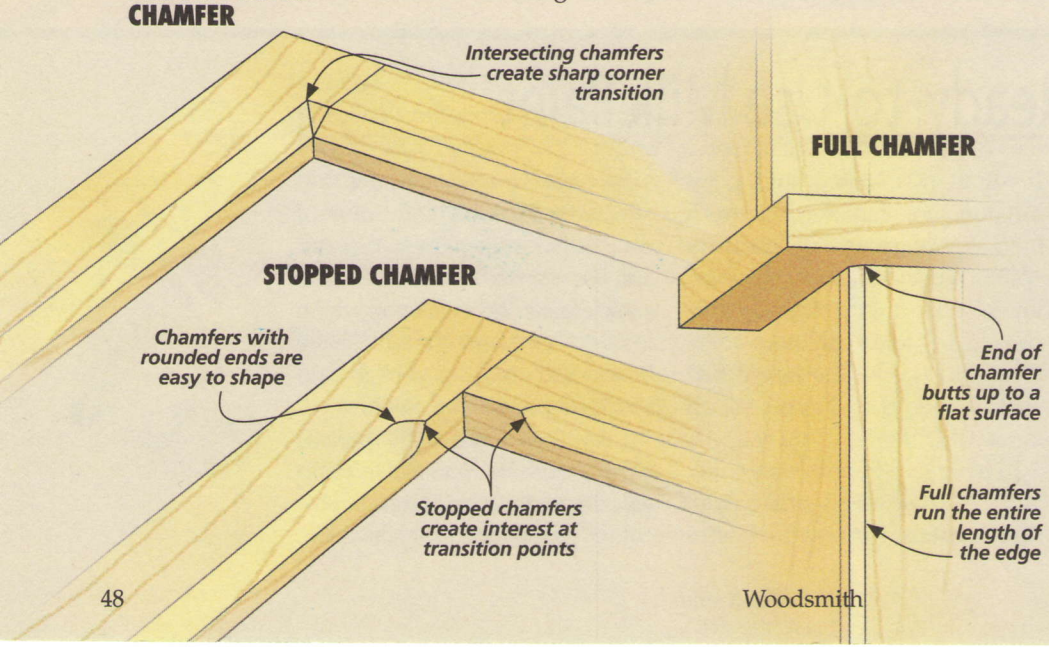

The box at the bottom of the page shows several different ways to transition a chamfer.

WHY A CHAMFER? Chamfers can be added to a project to fill a number of roles. I'll give you some insight into just a few ways your projects may benefit from their use. The drawings at right help illustrate these points.

DAMAGE CONTROL. Sharp outside corners on a project are vulnerable to chips, dings, dents, or other abuse. Adding a small chamfer (as little as 1/16") to ease the edge is often the answer. For example, the chamfer around the very bottom of the table leg shown at the far right helps minimizes damage when sliding the table across a floor.

Easing sharp edges with a small chamfer has another added benefit. The chamfer helps soften the edge to the touch, such as on a tabletop or drawer front.

FOR APPEARANCE SAKE. A chamfer may also be used like any other profile to add visual detail to an otherwise plain, square edge. Many of the projects you see in *Woodsmith* feature chamfers shaped for this reason. Chamfers that are 1/4"-wide and up become focal points that play a role in the overall style of a project.

Keep in mind that the larger the chamfer, the more noticeable it will be. So it's important to scale the chamfer for the desired affect — subtle or bold.

CRISP & CLEAN. The crisp, unfussy appearance of a chamfer profile makes it a good fit with contemporary designs, as illustrated by the coffee table above. The sharp lines and flat surface add detail that complements a clean, uncluttered look.

ATTENTION-GRABBING. The picture frame at upper left demonstrates what I call the funnel effect. You may notice that several chamfers wrap around the inside edges of the frame and draw your eye inward. This focuses the attention to what's in the frame without being distracting.

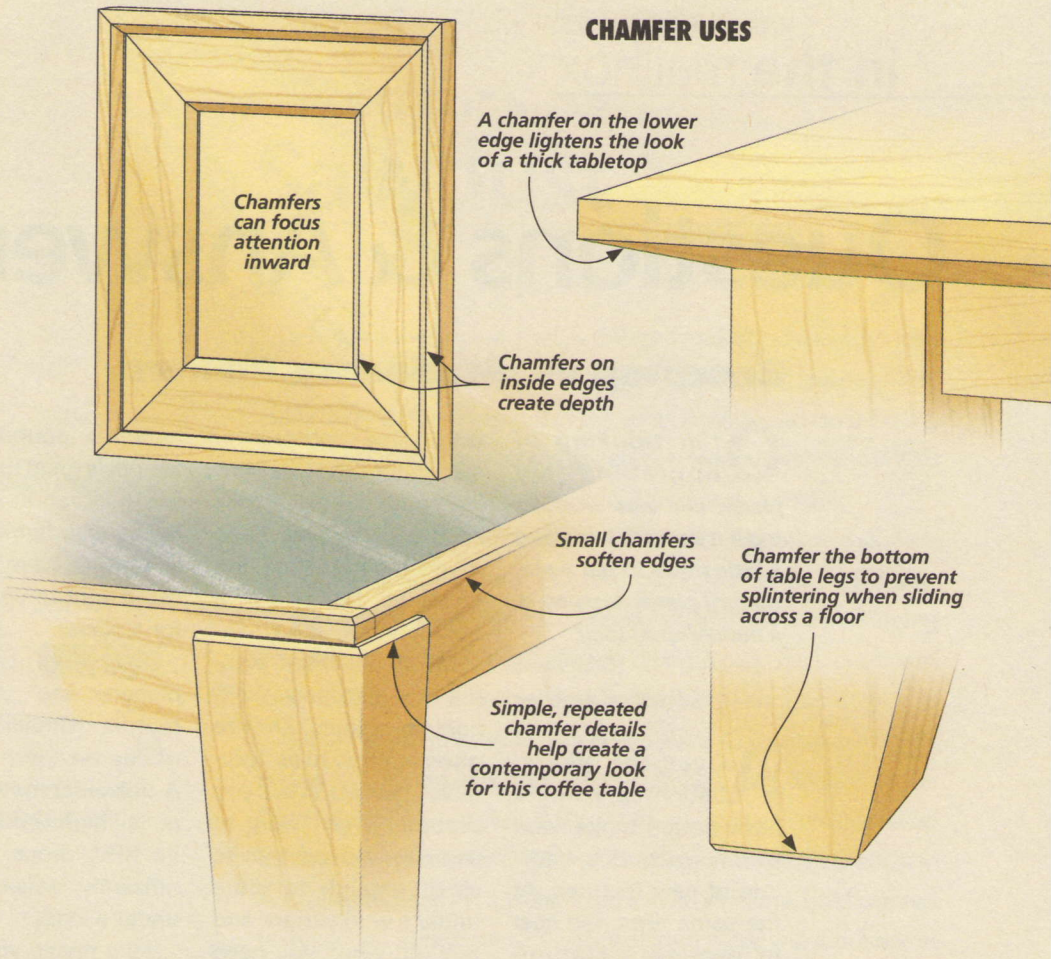

You'll find this same technique is used on the step-back cupboard on page 34. The stopped chamfers on the inside edges of the upper face frame stiles help direct your gaze to the contents of the cupboard's open shelves.

A LIGHTER LOOK. One final way to use a chamfer is to lighten the look of a bulky or thick part. A chamfer on the underside of a tabletop makes it appear thinner and works to draw the eye upward (upper right drawing). Likewise, a wide chamfer on the inside corner of a square table or chair leg reduces mass and the blocky shape is visually lightened and de-emphasized.

As you can see, the uses of the simple chamfer are wide ranging and impressive. This valuable design element deserves every woodworker's attention. W

A Closer Look: Chamfer Stops

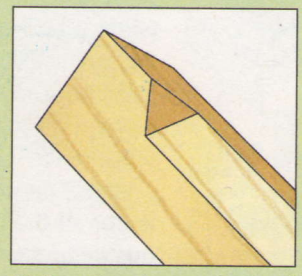

Plain. *The flat surface of this plain transition creates a crisp, eye-catching facet.*

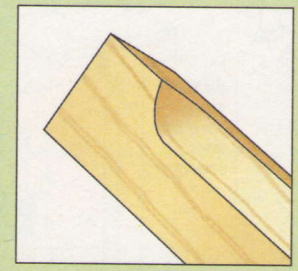

Rounded. *The rounded chamfer stop is common and easy to shape.*

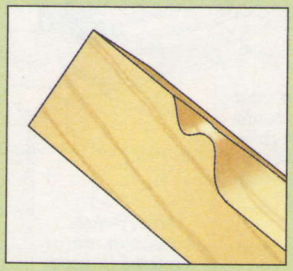

Lamb's Tongue. *This classic stop profile is seen on high-style furniture.*

Questions & Answers

Benchtop vs. Stationary Planers

Q ***I'm thinking of upgrading my planer and was wondering if it's worth spending a little more to get a stationary planer instead of a benchtop model?***

John Piper
Salt Lake City, Utah

A Over the years, benchtop planers have gotten bigger and better with the addition of new features. At the same time, the cost of owning a stationary planer has come down due to the flood of inexpensive imported machines.

Today, only a few hundred dollars separate the top-of-the-line benchtop planers from the entry-level stationary planers. So it's worth taking a look at the pros and cons of each type. (See the drawings below for a quick comparison.)

WEIGHT. Benchtop planers are compact, self-contained units. They're often referred to as "portable" planers. While you probably won't want to carry one around, they're small enough to store under a worksurface and pull out when you need to use it. This makes a benchtop planer a great choice for infrequent use or a small shop.

By way of contrast, stationary planers are made of lots of cast iron and typically weigh several hundred pounds. This weight is great for dampening vibration, but can be a real hindrance if you don't have a dedicated spot in your shop for a planer.

MOTORS. All benchtop planers use universal motors (similar to the motor on your router). A universal motor spins at a high speed, but its RPM drops off significantly when placed under a load.

As a result, you won't be able to take heavy passes with a benchtop planer (particularly when planing wide boards). And you may have to take an occasional break during long planing sessions to avoid overheating the motor.

This isn't the case with the induction motors used on stationary planers. This type of motor is designed to run all day long. And it can hog off ⅛" of material at a time without breaking a sweat, even on a full-width board. One possible downside, though, is just about all stationary planers require a 220-volt circuit.

NOISE. The noise factor is one of the most obvious differences between benchtop and stationary planers. The induction motors on stationary planers are noticeably quieter than the high-speed universal motors on the benchtops. You'll still need to use hearing protection with either type, but if your shop is in a basement or attached garage, a stationary planer won't drive everyone else out of the house.

MAINTENANCE. Most of the newer benchtop planers are equipped with self-indexing knives, making blade changes a snap. While some newer models of stationary planers also have this feature, many still lack it.

LONGEVITY. A stationary planer is a tool that you'll be able to hand down to your grandkids. Benchtop planers are essentially "disposable" tools. If the motor burns out, it's usually not cost-effective to have it repaired.

In the end, the decision between a benchtop or stationary planer really comes down to how you intend to use it. If you buy a lot of rough lumber and plane it down yourself, a stationary planer may be more suited to your purpose.

But if you're a typical home woodworker, building a few projects a year, a benchtop planer should meet all your needs just fine. W

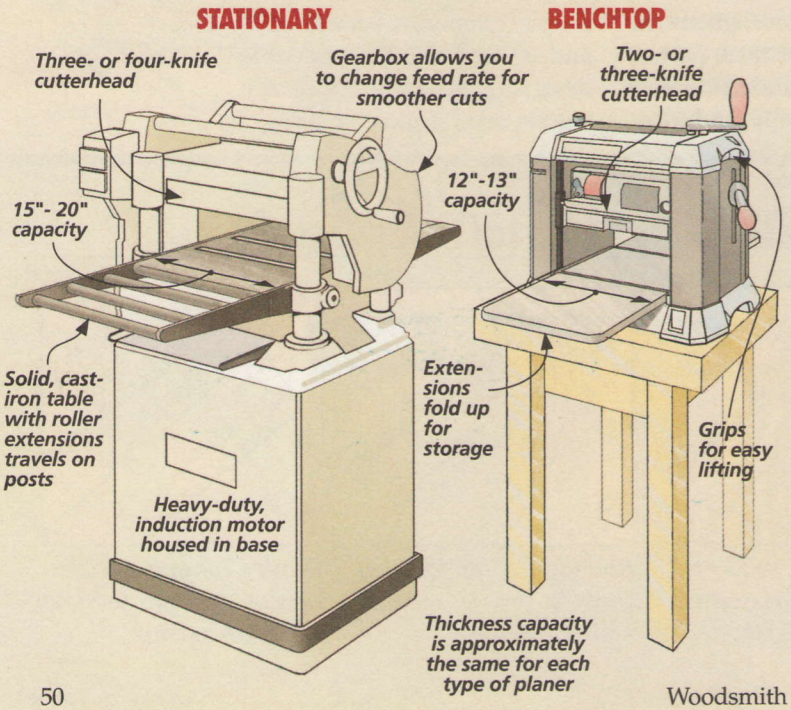

Sources

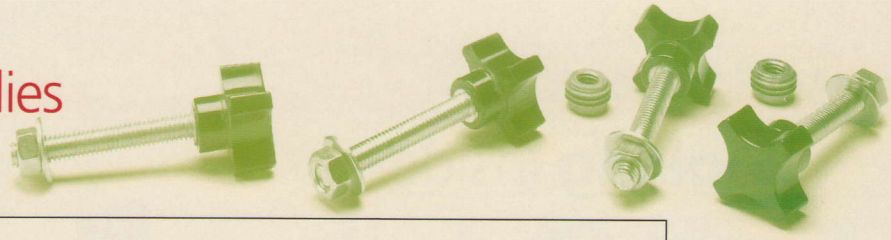

HIGH-TECH HINGES

The various hinges shown in the article on page 8 were all purchased from *Woodcraft* or *Rockler*. (Part numbers vary depending on the size and finish.) You can also find similar hinges from other sources.

BENCHTOP ROUTER TABLES

You can purchase benchtop router tables through many woodworking suppliers. The *Kreg* router table is sold through *Woodcraft* (148070) and *Kreg Tool* (PRS2000). We purchased the *Bench Dog* router table from *Rockler* (20253). Both of these router tables are also available from *Amazon*.

DRILL GUIDE

A drill guide is a great way to add accuracy to your hand drill. The *Wolfcraft* guide shown on page 12 is available from *Amazon* and *Rockler* (46441). The same guide is also sold by *Craftsman* (00967173000).

BOX JOINTS

The *Freud Box Joint Cutter Set* shown in the article on page 14 is available from several of the woodworking dealers listed in the margin at right.

WINE RACK

You won't need any hardware to build the wine rack on page 18. To give the cherry a warm look, we stained the project with a mix of three parts of *Zar Stain* (Cherry) and one part *WoodKote Jel'd Stain* (Cherry). This was followed by two coats of lacquer.

FOUR POSTER BED

Aside from some screws, the only hardware you'll need for the bed on page 24 is a set of bed rail brackets. We purchased these from *Rockler* (32077).

The stain used on the bed is *General Finishes' Gel Stain* (Java). Then I sprayed on two coats of lacquer.

STEP-BACK CUPBOARD

You'll need just a few pieces of hardware to build the step-back cupboard on page 34. The H-hinges (01X35.80) and cabinet latch (01X39.10) came from *Lee Valley*. The square finish nails (N-5) and headless cut brads (1½") were purchased from from *Horton Brasses*.

The case was finished with two coats of *General Finishes' Seal-a-Cell*. After lightly sanding through the finish on the corners and edges to simulate wear, a coat of *General Finishes' Gel Stain* (Java) was applied as a glaze.

The beadboard was painted with two colors of *General Finishes' Milk Paint* (Somerset Gold and Antique White). After lightly sanding through the top layer of paint in a few spots, I applied a coat of *General Finishes' Glaze* (Yellow Ochre).

MILK PAINT

The powdered milk paints discussed in the article on page 46 were purchased from *Woodcraft*. *Woodcraft* also carries *General Finishes'* line of pre-mixed milk paints sold in cans. WW

Online Customer Service

Click on *Magazine Customer Service* at **www.woodsmith.com**

- Access your account status
- Change your mailing or email address
- Pay your bill
- Renew your subscription
- Tell us if you've missed an issue
- Find out if your payment has been received

MAIL ORDER SOURCES

Project supplies may be ordered from the following companies:

Woodsmith Store
800-444-7527
Bench Dog Router Table, Freud Box Joint Cutter Set, Kreg Router Table

Rockler
800-279-4441
rockler.com
Bed Rail Brackets, Bench Dog Router Table, Freud Box Joint Cutter Set, Hinges, Wolfcraft Drill Guide

Amazon.com
Benchtop Router Tables, Freud Box Joint Cutter Set, Wolfcraft Drill Guide

Craftsman
800-697-3277
craftsman.com
Craftsman Drill Guide

Horton Brasses
800-754-9127
horton-brasses.com
Headless Cut Brads, Square Finish Nails

Kreg Tool
800-447-8638
kregtool.com
Kreg Router Table

Lee Valley
800-871-8158
leevalley.com
Cabinet Latch, H-Hinges

Woodcraft
800-225-1153
woodcraft.com
Freud Box Joint Cutter Set, Hinges, Kreg Router Table, Milk Paints

Keep It All Organized!

Woodsmith Binders

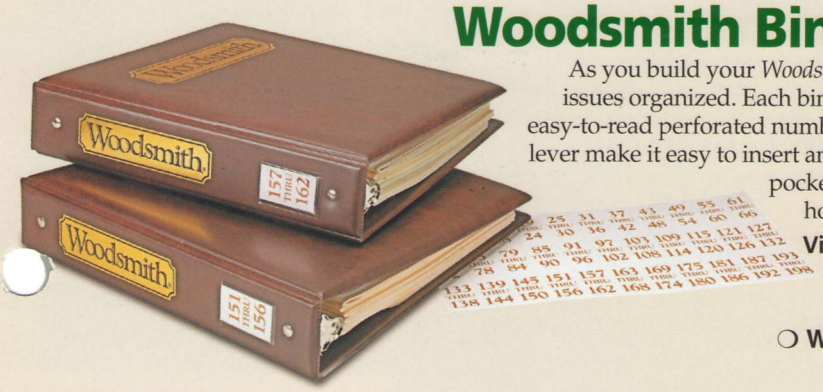

As you build your *Woodsmith* library, here's a way to keep your issues organized. Each binder features durable vinyl covers and easy-to-read perforated number tags. Snap rings with a quick-open lever make it easy to insert and remove issues. And there's an extra pocket inside for storing notes. Each binder holds a full year (6 issues) of *Woodsmith*.

Visit **Woodsmith.com** to order or call **1-800-444-7527**.

***Woodsmith* Binder**

❍ **WB** *(Holds 6 issues)*.....$12.95

looking inside
Final Details

► *Four Poster Bed.* Tapered posts and clean lines give this bed a timeless look. Step-by-step plans for building it begin on page 24.

▲ *Step-Back Cupboard.* Open shelves make this cupboard ideal for storage or display. The compact footprint means you can use it in just about any room of the house. You'll find complete plans on page 34.

◄ *Wine Rack.* With a space-saving design and stylish good looks, this wine rack is at home whether sitting on a countertop or buffet. Detailed instructions for building the project start on page 18.